Non-RSC Standard Drawings

Note -

A number of the standard drawings referenced in the Redland Planning Scheme nave not been prepared by Council. Non-RSC standard drawings referred to in the planning scheme (see below) may be located at the following web addresses.

Referenced Plan Number	IPWEA (Institute of Public Works Engineers Australia)
R-0180	Flexibeam Guardrail
R-0181	Flexibeam Guardrail Components
G-0044	Fencing Tubular Steel Fencing with & without Chain Wire
G-0045	Fencing Weldmesh Fencing & Control Fence
D-0001	Index Standard Drawings Drainage
D-0010	Stormwater Access Chamber Details DIA 1050 to 2100
D-0011	Access Chamber Roof Slabs DIA 1050 to 2100
D-0012	Access Chamber Roof Slabs DIA 1500 Extended 600 and 900
D-0013	Access Chamber Roof Slab – Rectangular Standard Reinforcement
D-0014	Access Chamber Cast Iron Cover & Frame – Concrete Filled Cover
D-0015	Access Chamber Cast Iron Cover & Frame Bolt Down
D-0016	Access Chamber Step Irons
D-0017	Access Chamber Roof Slab – Rectangular Fabric Reinforcement
D-0050	Field Inlet and Overflow Gully Type 1 & Type 2
D-0067	Precast Stormwater Inlet
W-0010	Air Valve Pit DIA 50 and DIA 80 Air Valves

IPWEA plans referred to above can be found at the following web address:

http://www.ipwea.org.au/AM/Template.cfm?Section=Queensland_Publications&Template=/CM/HTMLDisplay.cfm&ContentID=3376

Referenced Plan Number	Department of Main Roads (QLD)
MR 1356	Timber and Tubular Steel Post and Installations Details

DMR plans referred to above can be found at the following web address:

http://www.mainroads.qld.gov.au/web/AttachStore.nsf/allobjects/Standard%20Drawings%20Roads%20Manual%20-%201356/$file/SDRM_1356.pdf

Referenced Plan Number	WSAA (Water Services Association of Australia)
WAT-1300	Valve and Hydrant Identification

WSAA plans referred to above can be found at the following web address:

http://www.wsaa.asn.au

Std. Dwg. No.	Descriptions
	Redland Shire Council Approved Standard Drawings
	IPWEAQ Drawings
R-0180	Flexibeam Guardrail, Layout and Installation
R-0181	Flexibeam Guardrail, Components
R-0084	Kerb Ramp
R-0131	Traffic Control Devices
R-0141	Subsoil Drainage Details at Medians/Islands
	Qld. Gov. Dept. of Main Roads Standard Drawings
	All D.M.R. Drawings listed in the IPWEAQ index standard drawing number R-0001 are approved, plus MR1446 – Ramped Pedestrian Crossing and MR 1447 – Ramped and Cut Through Pedestrian Crossings
	Redland Shire Council Drawings
R-RSC-2	Residential Driveway Crossover for Kerb and Channel
R-RSC-3	Commercial/Industrial/Multiple Dwelling Driveway Crossover Type A
R-RSC-4	Commercial/Industrial Driveway Crossover Type B
R-RSC-5	Concrete Footpaths
R-RSC-6	Kerbs and Channels Profiles and Dimensions Incl. Edge Restraints, Median & Invert
R-RSC-7	Kerb & Channel Drainage Connections
R-RSC-8	Footpath Profile Policy
R-RSC-9	Public Utilities in Road Reserves – Typical Service Corridors and Alignments
R-RSC-10	Public Utilities in Road Reserves – Typical Service Conduit Sections
R-RSC-11	Street Name Sign
R-RSC-12	Sub Surface Drainage
R-RSC-13	Water Service Conduits
R-RSC-15	Road Types and Minimum Road Widths
R-RSC-16	Domestic Driveway Crossover for Pipe Crossing
R-RSC-21	Intersection Concrete Invert Details

D	AMENDED	5/05	
C	AMENDED	1/02	
B	AMENDED	1/99	
A	ORIGINAL ISSUE	1/98	
REVISIONS		DATE	APPROVED

© REDLAND SHIRE COUNCIL

DISCLAIMER. The authors shall have no liability or responsibility to the user or any other person or entity with respect to any liability, loss or damage caused or alleged to be caused, directly or indirectly, by the adoption and use of these Standard Drawings including, but not limited to, any interruption of service, loss of business or anticipatory profits, or consequential damages resulting from the use of these Standard Drawings. Persons must not rely on these Standard Drawings as the equivalent of, or a substitute for, project-specific design and assessment by an appropriately qualified professional.

Redland SHIRE COUNCIL

INDEX
STANDARD DRAWINGS
ROAD/STREET

ROAD/STREET
Standard Drawing
R-RSC-1
A B C D

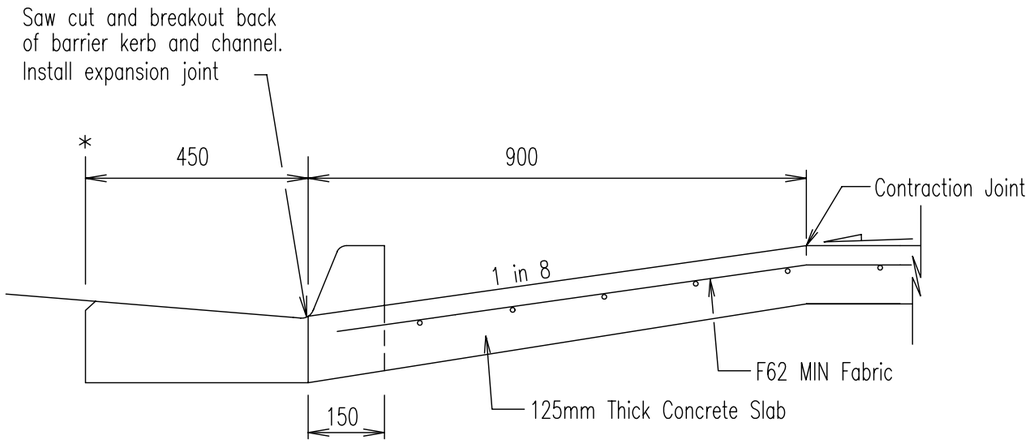

BARRIER KERB & CHANNEL – TYPE B1

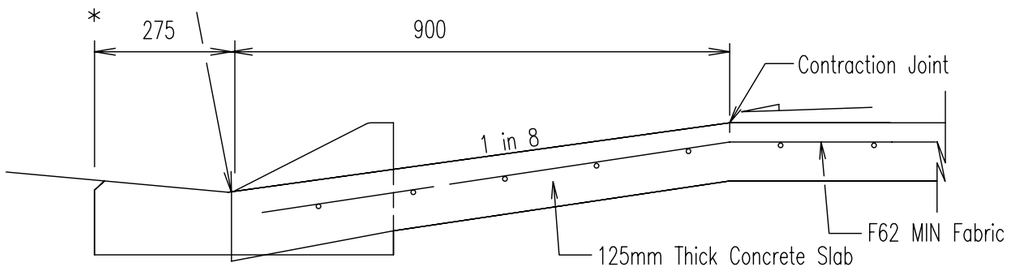

MOUNTABLE KERB & CHANNEL – TYPE M1

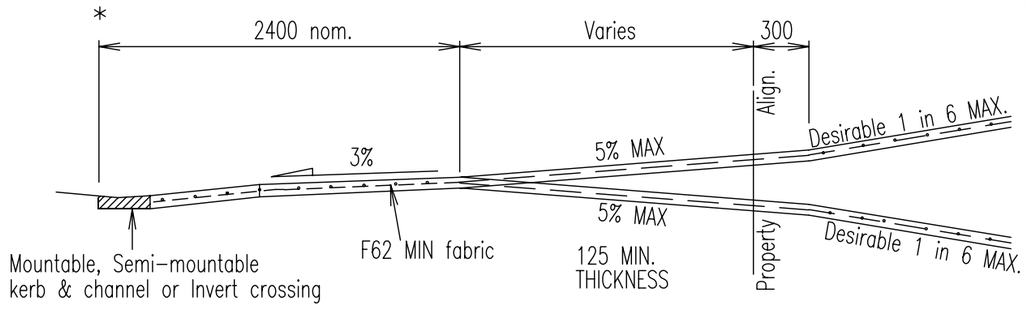

SECTION A–A

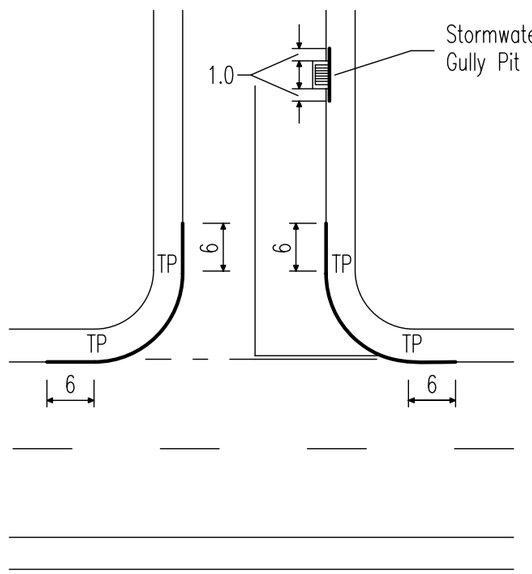

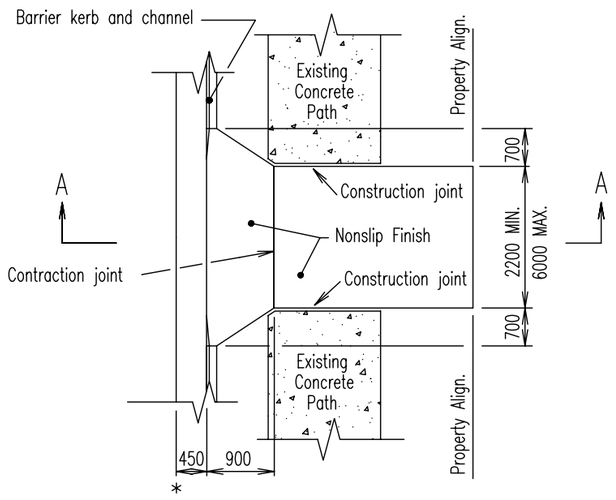

SLAB ABUTTING CHANNEL INVERT BARRIER KERB AND CHANNEL

Prohibited Locations shown in a heavy line.
All Dimensions are in Metres.

LEGEND

* Lip Line for Setting Out

NOTES:

1. Crossings are not designed for commercial vehicles.
2. Reprofile and turf adjacent footpath to finish flush with driveway. Footpath earthworks adjoining concrete must be well compacted.
3. Where concrete paths exist, sawcut and grade smoothly to driveway crossover and join with expansion joint
4. Concrete surface tolerance to be $^{+5mm}_{-0mm}$, over 3 metre sections.
5. Concrete N25 in accordance with AS 1379 and AS 3600.
6. Reinforcement fabric to AS 4671, 50 top and edge cover, lap fabric 250.
7. Approved materials for construction :– Concrete or Paving blocks on 100mm minimum concrete with F62 mesh. Refer project drawings.
8. Expansion joints to be 10 thick, full depth closed cell cross linked polyethylene foam (85 – 150 kg/m)
9. Other kerb and channel types shall have the same construction treatment as shown on this drawing.
10. All reinforcing mesh shall be supported on bar chairs.
11. Driveways are not to be constructed within 1m of a stormwater gully pit.
12. Galvanised steel dowels, 12mm dia, 250mm long and spaced at 500mm are used when joining to concrete paths to ensure a flush joint is maintained
13. Reinforcing mesh to be cut at construction joint
14. All dimensions in millimetres.
15. Design Standard for Self–assessable development. Widths in excess of 6000mm (6 metres), will require a code assessable Development Application, (see Part 7 Division 4 – Domestic Driveway Crossover Code).

F	AMENDED	12/07	
E	AMENDED	7/05	
D	AMENDED	2/03	
C	AMENDED	1/02	
B	AMENDED	1/99	
A	ORIGINAL ISSUE	1/98	
REVISIONS		DATE	APPROVED

© REDLAND SHIRE COUNCIL

DISCLAIMER. The authors shall have no liability or responsibility to the user or any other person or entity with respect to any liability, loss or damage caused or alleged to be caused, directly or indirectly, by the adoption and use of these Standard Drawings including, but not limited to, any interruption of service, loss of business or anticipatory profits, or consequential damages resulting from the use of these Standard Drawings. Persons must not rely on these Standard Drawings as the equivalent of, or a substitute for, project–specific design and assessment by an appropriately qualified professional.

Redland SHIRE COUNCIL

DOMESTIC DRIVEWAY CROSSOVER FOR KERB AND CHANNEL

F

ROAD/STREET

Standard Drawing

R–RSC–2

A B C D E

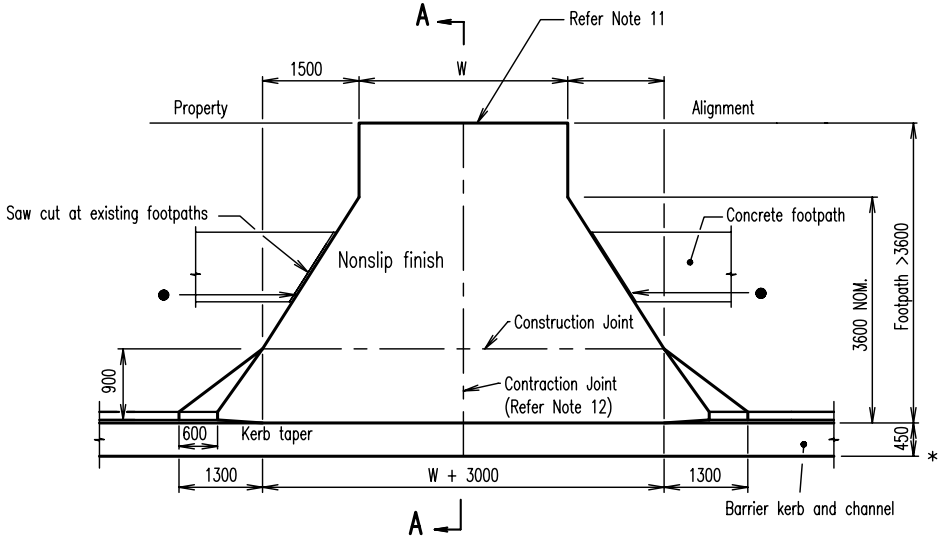

PLAN – WIDE FOOTPATHS

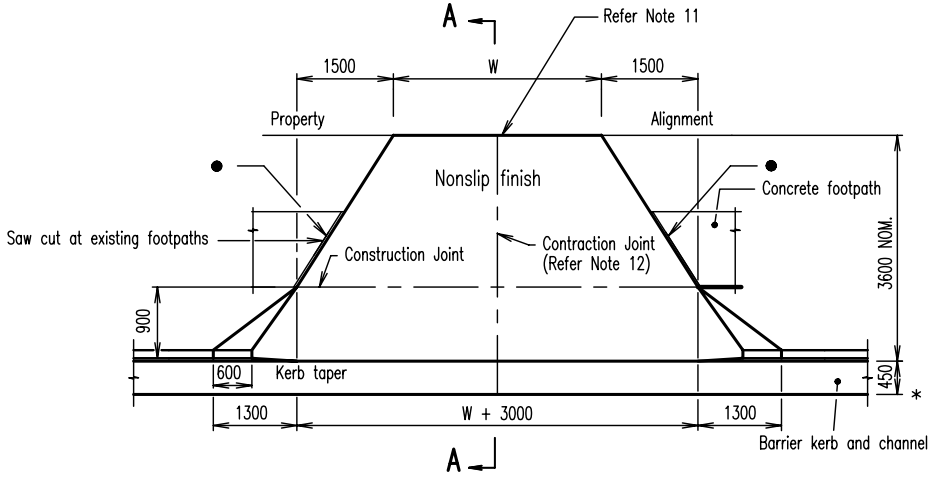

PLAN – 3.6m FOOTPATH

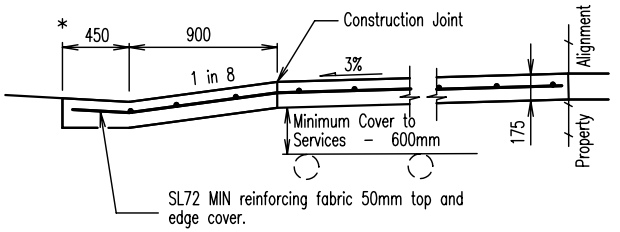

SECTION A – A

LEGEND

* Lip Line

● Expansion joints to be 10 thick, full depth closed cell cross linked polyethylene foam (85 – 150 kg/m³). Also refer Note 12.

NOTES:

1. Concrete N25 in accordance with AS 1379 and AS 3600.
2. Reinforcing fabric to AS 4671. Lap fabric 250mm.
3. Depths of concrete and reinforcing steel shown are the minimum requirements for good foundation conditions, and average traffic loading. Where this does not apply, depths of concrete and reinforcing shall be increased to suit specific conditions.
4. Design of crossings may vary, refer project drawings.
5. Dimension W, 3.0m One way, 5.5m Two way, refer specification or project drawings.
6. Reprofile adjacent footpath to match driveway,as directed by Redland Shire Council. Footpath earthworks adjoining concrete must be well compacted.
7. Existing footpath profile to be maintained where possible.
8. Compaction for subgrade 95% Standard to AS 1289.5.1.1.
9. Where subgrade is less than CBR 5 excavate and provide imported material to satisfaction of the Superintendent.
10. The driveway shall be concrete unless otherwise approved.
11. Gully pits may be provided on each side inside the property boundary when discharging to street underground drainage. Alternatively, a grated drain may be provided on the side of the property boundary. Refer project Drawings.
12. Galvanised steel slip dowels, 12mm dia, 250mm long and spaced at 500mm are used when joining to concrete paths to ensure a flush joint is maintained.
13. Contraction joints are required at 3 to 4.5m centres.
14. All reinforcing mesh shall be supported on bar chairs.
15. This drawing indicates the minimum standard required unless otherwise specified in the development approval.
16. All dimensions in millimetres.

D	AMENDED	7/05	
C	AMENDED	1/02	
B	AMENDED	1/99	
A	ORIGINAL ISSUE	1/98	
REVISIONS		DATE	APPROVED

© REDLAND SHIRE COUNCIL

DISCLAIMER. The authors shall have no liability or responsibility to the user or any other person or entity with respect to any liability, loss or damage caused or alleged to be caused, directly or indirectly, by the adoption and use of these Standard Drawings including, but not limited to, any interruption of service, loss of business or anticipatory profits, or consequential damages resulting from the use of these Standard Drawings. Persons must not rely on these Standard Drawings as the equivalent of, or a substitute for, project-specific design and assessment by an appropriately qualified professional.

Redland SHIRE COUNCIL

COMMERCIAL / INDUSTRIAL/ MULTIPLE DWELLING / APARTMENT BUILDING DRIVEWAY CROSSOVER (TYPE A)

ROAD/STREET

Standard Drawing

R–RSC–3

A | B | C | D

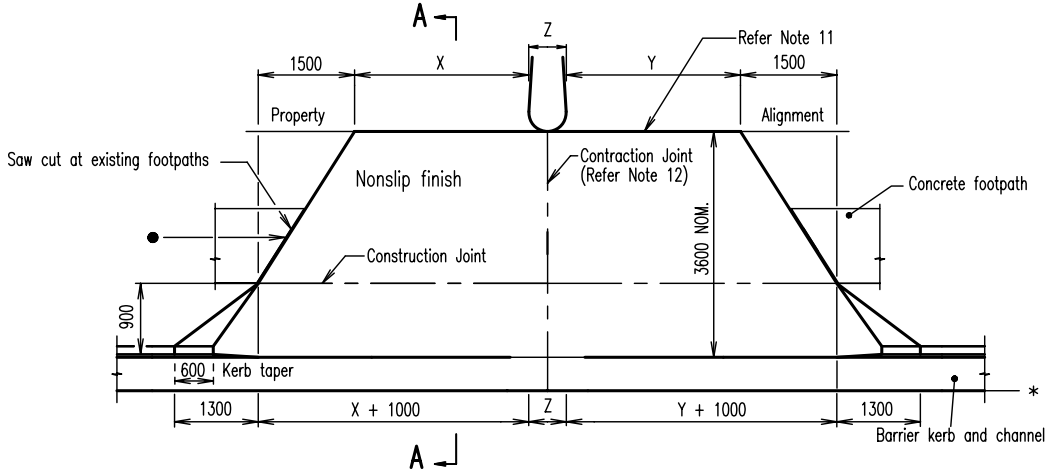

PLAN – 3.6m FOOTPATH

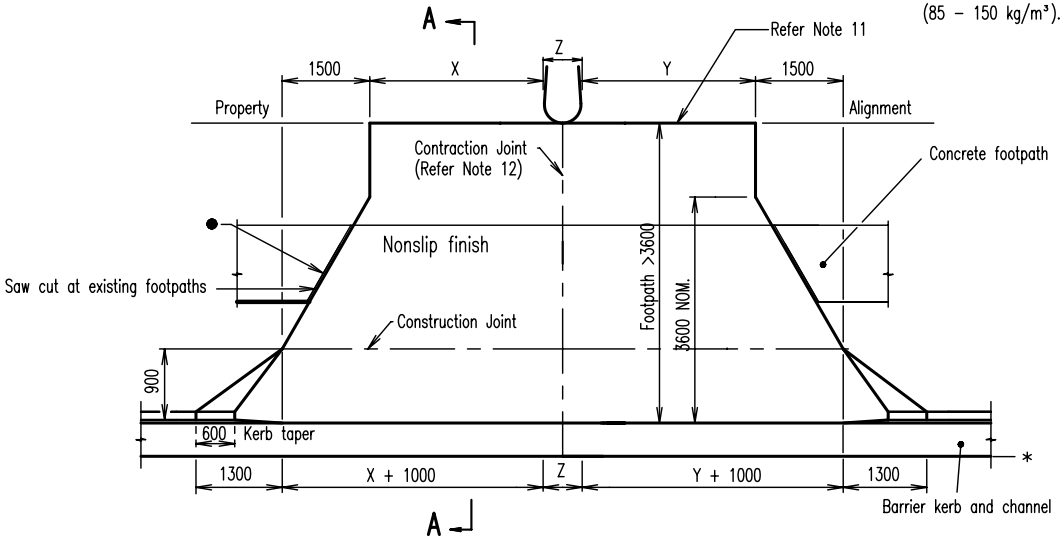

PLAN – WIDE FOOTPATHS

LEGEND

* Lip Line

● Expansion joints to be 10 thick, full depth closed cell cross linked polyethylene foam (85 – 150 kg/m³). Also refer Note 12.

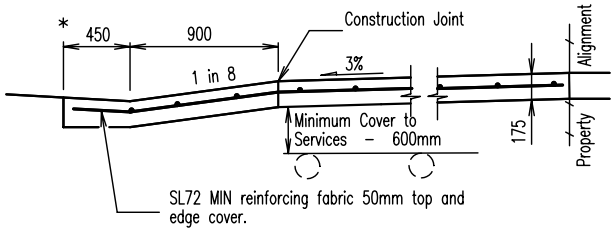

SECTION A – A

NOTES:

1. Concrete N25 in accordance with AS 1379 amd AS 3600.
2. Reinforcing fabric to AS 4671. Lap fabric 250mm.
3. Depths of concrete and reinforcing steel shown are the minimum requirements for good foundation conditions, and average traffic loading. Where this does not apply, depths of concrete and reinforcing shall be increased to suit specific conditions.
4. Design of crossings may vary, refer project drawings.
5. Dimensions X, Y, & Z , refer specification or project drawings. Unless otherwise specified X = 5500, Y = 4500 and Z = 1200
6. Reprofile adjacent footpath to match driveway, as directed by Redland Shire Council. Footpath earthworks adjoining concrete must be well compacted.
7. Existing footpath profile to be maintained where possible.
8. Compaction for subgrade 95% Standard to AS 1289.5.1.1.
9. Where subgrade is less than CBR 5 excavate and provide imported material to satisfaction of the Superintendent.
10. The driveway shall be concrete unless otherwise approved.
11. Gully pits may be provided on each side inside the property boundary when discharging to street underground drainage. Alternatively, a grated drain may be provided on the side of the property boundary. Refer project Drawings.
12. Galvanised steel slip dowels, 12mm dia, 250mm long and spaced at 500mm are used when joining to concrete paths to ensure a flush joint is maintained.
13. Contraction Joints are required in driveway at 3 to 4.5m centres.
14. All reinforcing mesh shall be supported on bar chairs.
15. This drawing indicates the minimum standard required unless otherwise specified in the development approval.
16. All dimensions in millimetres.

D	AMENDED	7/05	
C	AMENDED	1/02	
B	AMENDED	1/99	
A	ORIGNIAL ISSUE	1/98	
REVISIONS		DATE	APPROVED

© REDLAND SHIRE COUNCIL

DISCLAIMER. The authors shall have no liability or responsibility to the user or any other person or entity with respect to any liability, loss or damage caused or alleged to be caused, directly or indirectly, by the adoption and use of these Standard Drawings including, but not limited to, any interruption of service, loss of business or anticipatory profits, or consequential damages resulting from the use of these Standard Drawings. Persons must not rely on these Standard Drawings as the equivalent of, or a substitute for, project-specific design and assessment by an appropriately qualified professional.

Redland SHIRE COUNCIL

COMMERCIAL/INDUSTRIAL DRIVEWAY CROSSOVER (TYPE B)

Standard Drawing
R-RSC-4

A | B | C | D

Width varies:
- Footpaths 1500 minimum width
- Shared use paths 2500 minimum, 2000 absolute minimum in restrcted/low use situations
- Commuter and recreational paths 2500 minimum width for lower order paths or 3000 maximum width for higher order paths in accordance with Redlands Cycling and Pedestrian Strategy Technical Report.

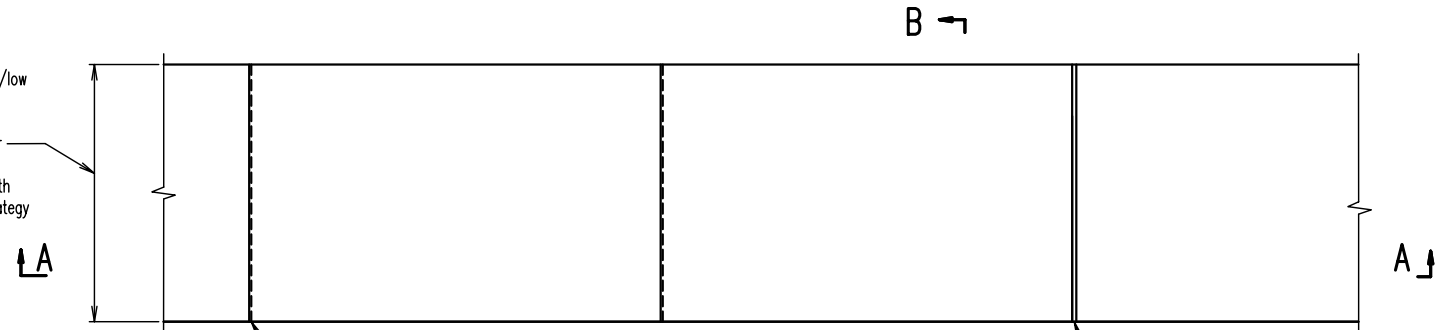

PLAN

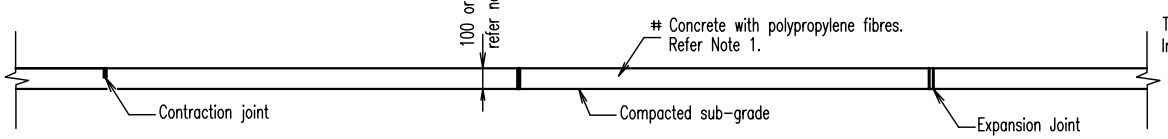

SECTION A – A

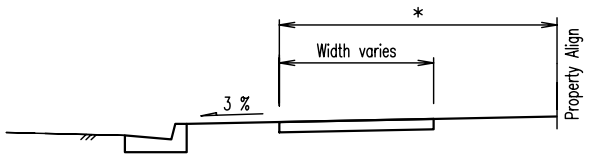

SECTION B–B

(Where kerb & channel exists)

FIBRE REINFORCED CONCRETE SPECIFICATION

The concrete shall be reinforced with a mixed dose of high performance polymer fibres and discreet graded fibrillated filament fibres. These fibres shall be provided as a coarse filament in an engineered contoured sinusoildal profile, of not less than 600 denier and discreet graded fibrillated filament fibres, of not greater than 6 denier. These fibres are to be manufactured from virgin polypropylene and added to the concrete, at the rate of 4.6kg per cubic metre. The 4.6kg shall consist of 3.8kg of HPP and 0.8kg of discrete graded fibrillated filament fibres.

LEGEND

* 2700 width for 4000 verge
Distance varies to provide adequate clearance to street light poles, trees and fixed objects on wider verges.

\# Alternative treatment without fibres, where specified by Council is SL62 reinforcing fabric, 50mm top edge cover, supported on bar chairs. Also refer Note 5.

NOTES

1. Concrete N25 in accordance with AS 1379 and AS 3600. with polypropylene fibres incorporated into the concrete mix Refer Fibre Reinforced Concrete Specification
2. All concrete to be broom finished.
3. Contraction/expansion joints, 2m MAX spacing.
4. Finished surface tolerance to be maximum +6mm relative to kerb level and crossfall specified. −0mm
5. Thickness to be increased to 125mm at residential vehicular crossovers and through parks and reserves. Provide a contraction joint at both ends of crossover
6. Concrete footpaths, adjoining existing driveways are to be transitioned over a minimum 5.0m length.
7. Galvanised steel slip dowels, 12mm dia, 250mm long and spaced at 500mm are used wehn joining to existing concrete paths to ensure a flush joint is maintained.
8. A street opening permit must be obtained from Council, seek approval of location and levels prior to excavation.
9. All dimensions in millimetres.

D	AMENDED	8/05	
C	AMENDED	1/02	
B	AMENDED	1/99	
A	ORIGINAL ISSUE	1/98	
REVISIONS		DATE	APPROVED

© REDLAND SHIRE COUNCIL

DISCLAIMER. The authors shall have no liability or responsibility to the user or any other person or entity with respect to any liability, loss or damage caused or alleged to be caused, directly or indirectly, by the adoption and use of these Standard Drawings including, but not limited to, any interruption of service, loss of business or anticipatory profits, or consequential damages resulting from the use of these Standard Drawings. Persons must not rely on these Standard Drawings as the equivalent of, or a substitute for, project-specific design and assessment by an appropriately qualified professional.

Redland SHIRE COUNCIL

CONCRETE FOOTPATHS AND SHARED USE PATHS

ROAD/STREET

Standard Drawing

R–RSC–5

A | B | C | D

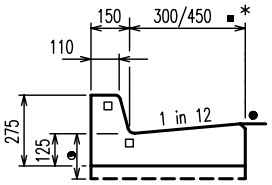

B1

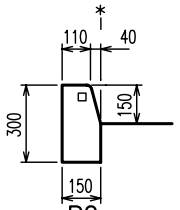

B2

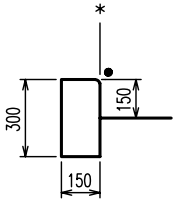

B3

BARRIER TYPE

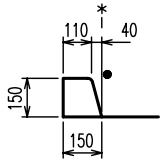

B4

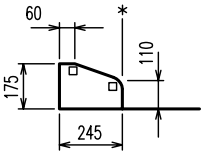

B5

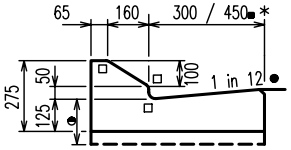

SM1

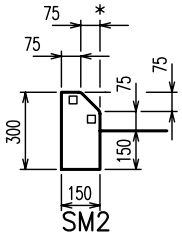

SM2

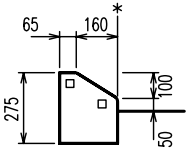

SM3

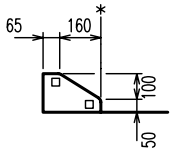

SM4

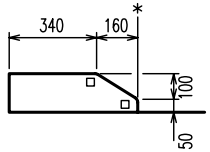

SM5

SEMI – MOUNTABLE TYPE

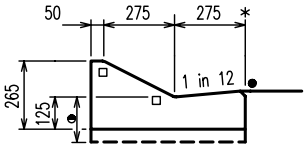

M1

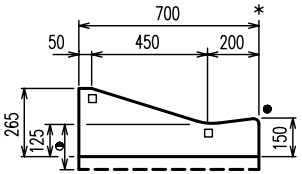

M2

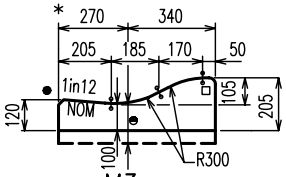

M3

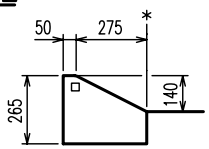

M4

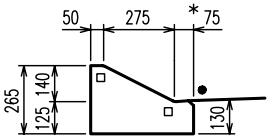

M5

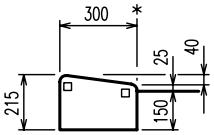

M6

MOUNTABLE TYPE

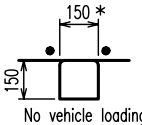

ER1

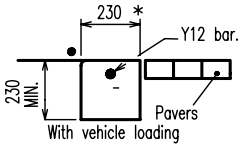

ER2

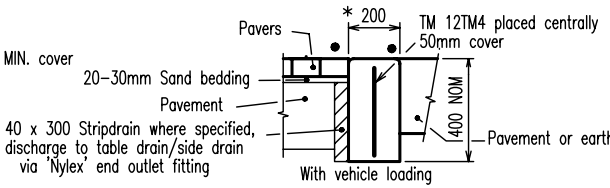

ER3

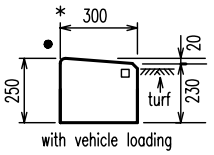

RSC–1

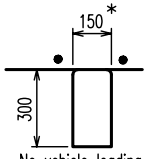

ER5

EDGE RESTRAINT

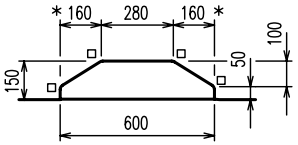

MEDIAN

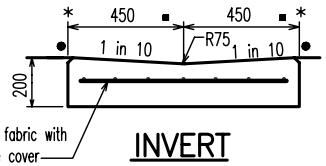

INVERT

LEGEND

- * Lip line for setting out.
- ▪ Channel, invert width – refer project drawings.
- ● 10mm Radius.
- □ 20mm Radius.
- ⬬ 175 where specified for commercial and industrial applications, refer project drawings.

NOTES:

1. All materials and construction shall comply with AS 2876 except for dimensions on this drawing.
2. Concrete N25 MIN in accordance with AS1379 and AS 3600. Concrete shall contain fibrillated fibres, added at the rate of not less than 0.9kgs per m³. The fibres shall not be more than 60 denier diameter and be made from 100% virgin polypropylene multifilament fibres. They shall not contain reprocessed olefin materials. fibres shall be homogeneously mixed throughout.
3. Reinforcement bars and trench fabric to AS 4671.
4. JOINTS: Contraction Joints to be cut through full depth of Kerb & Channel at 3m centres.
   : Expantion joints required at 30m centres and at tangent points of Kerb return. Provide 10mm thick full depth closed cell cross linked polyethylene foam (85–150kg/m³)
5. All kerbs, edge restraints and inverts are constructed on a 100mm thick CBR15 gravel base material which is to extend 150mm beyond the concrete edge
6. All dimensions in millimetres.

D	AMENDED	8/05	
C	AMENDED	1/02	
B	AMENDED	1/99	
A	ORIGINAL ISSUE	1/98	
REVISIONS		DATE	APPROVED

© REDLAND SHIRE COUNCIL

DISCLAIMER. The authors shall have no liability or responsibility to the user or any other person or entity with respect to any liability, loss or damage caused or alleged to be caused, directly or indirectly, by the adoption and use of these Standard Drawings including, but not limited to, any interruption of service, loss of business or anticipatory profits, or consequential damages resulting from the use of these Standard Drawings. Persons must not rely on these Standard Drawings as the equivalent of, or a substitute for, project-specific design and assessment by an appropriately qualified professional.

Redland SHIRE COUNCIL

KERBS AND CHANNELS PROFILES AND DIMENSIONS

INCL. EDGE RESTRAINTS, MEDIAN & INVERT

ROAD/STREET

Standard Drawing

R–RSC–6

A | B | C | D

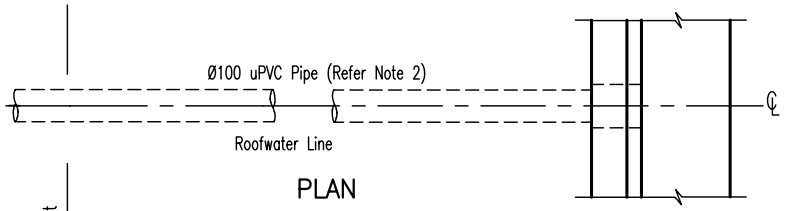

PLAN

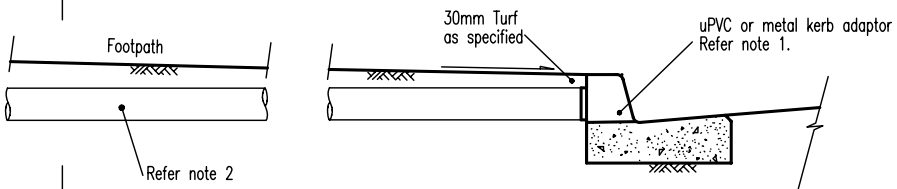

SECTIONAL ELEVATION

BARRIER KERB AND CHANNEL

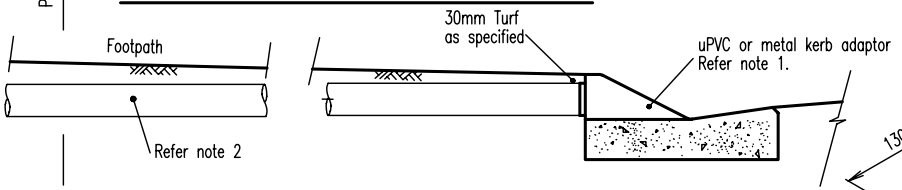

SECTIONAL ELEVATION

MOUNTABLE KERB AND CHANNEL

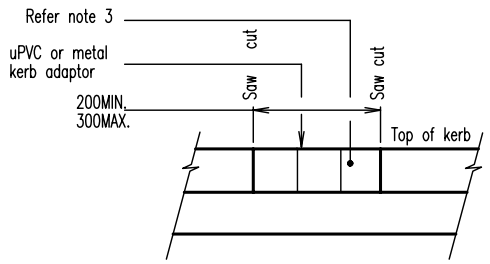

ELEVATION

EXISTING KERB AND CHANNEL

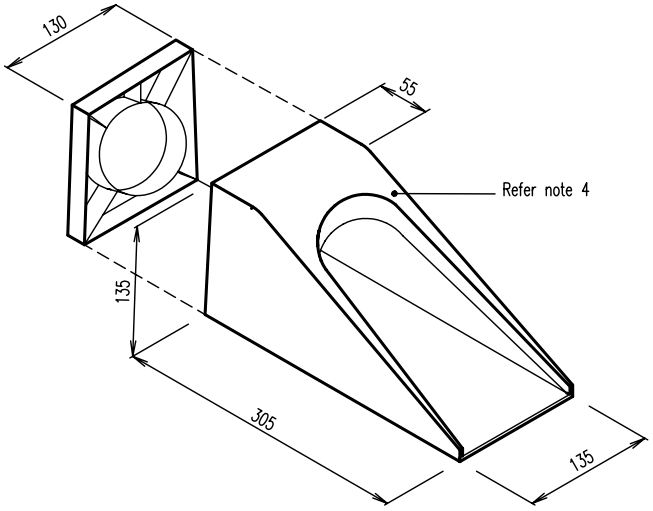

MOUNTABLE KERB ADAPTOR

Typical only Ø90 and Ø100 uPVC or metal

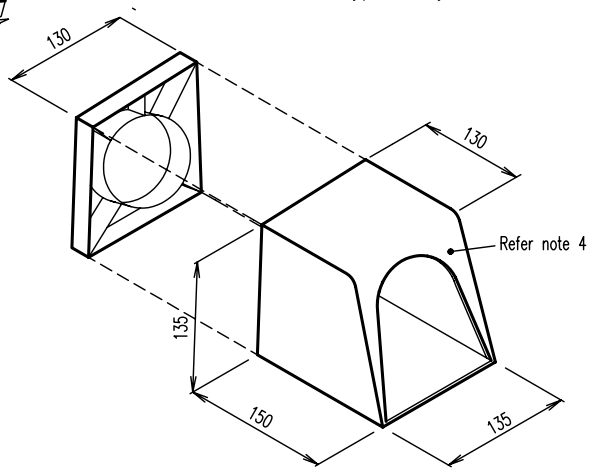

BARRIER KERB ADAPTOR

Typical only Ø90 and Ø100 uPVC or METAL

NOTES

1. Standard Ø100 uPVC or metal adaptor to suit barrier or mountable type kerb and channel.
2. Pipe across footpath to be laid with the maximum available cover, and with a minimum grade of 1 in 80. UPVC sewer pipe min. class S.H. or equivalent shall be used in residential development. 125 x175 x 4 RHS hot dipped galvanized may be used in Commercial and Industrial developments with appropriate Kerb Adaptor.
3. At existing kerb and channel saw cut kerb as necessary. Reinstate with N20/10 concrete in accordance with AS 1379 and AS3600 to clean concrete faces.
4. Use kerb adaptors that match kerb profile.
5. Refer project drawings/specifications for option to be adopted.
6. At new developments seal inlet to adaptor.
7. All dimensions in millimetres.

B	AMENDED	1/02	
A	ORIGINAL ISSUE	1/98	
	REVISIONS	DATE	APPROVED

© REDLAND SHIRE COUNCIL

DISCLAIMER. The authors shall have no liability or responsibility to the user or any other person or entity with respect to any liability, loss or damage caused or alleged to be caused, directly or indirectly, by the adoption and use of these Standard Drawings including, but not limited to, any interruption of service, loss of business or anticipatory profits, or consequential damages resulting from the use of these Standard Drawings. Persons must not rely on these Standard Drawings as the equivalent of, or a substitute for, project-specific design and assessment by an appropriately qualified professional.

Redland SHIRE COUNCIL

KERB AND CHANNEL DRAINAGE CONNECTIONS

ROAD/STREET

Standard Drawing

R-RSC-7

A | B

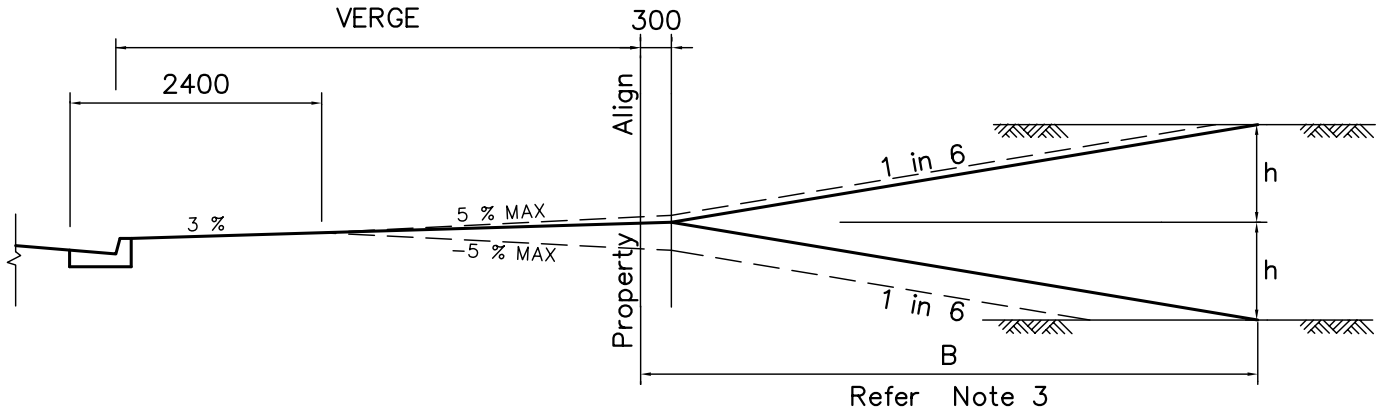

RESIDENTIAL FOOTPATH PROFILE & ADJOINING BATTER

Scale 1:50

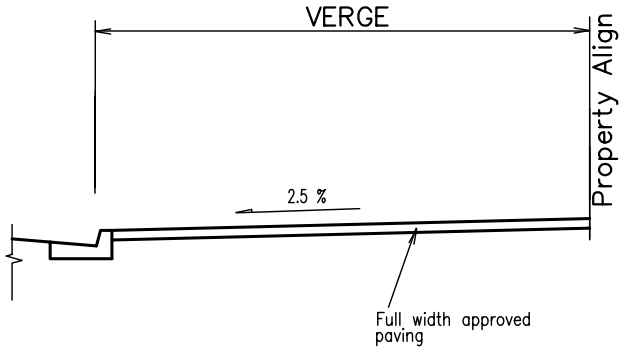

COMMERCIAL FOOTPATH PROFILE

NTS

NOTES

1. Where h < 750, a standard 3% footpath with 1 in 6 batter shall be adopted.
2. Where h > 750, a combination of 3% and + 5% Max. may be adopted for the footpath profile with 1 in 6 slopes in private property.
3. Where B > 6000 when adopting 1 in 6 batters they may be increased to 1 in 4 Max. with B constant at 6000.
4. Where h > 1500, 1 in 2 batters may be provided with access points to each property graded at 1 in 4.
   (Not to be adopted unless approved by the Manager Infrastructure Development.
5. Provide Topsoil and Turfing as specicfied.
6. All grades are to conform with regard to accessability to all members of the community.
7. Variations may be approved at the descretion of the Manager Infrastructure Develpment.
8. Paving type and pattern to be approved by Redland Shire Council.

B	AMENDED	1/99	
A	ORIGINAL ISSUE	1/98	
	REVISIONS	DATE	APPROVED

© REDLAND SHIRE COUNCIL

DISCLAIMER. The authors shall have no liability or responsibility to the user or any other person or entity with respect to any liability, loss or damage caused or alleged to be caused, directly or indirectly, by the adoption and use of these Standard Drawings including, but not limited to, any interruption of service, loss of business or anticipatory profits, or consequential damages resulting from the use of these Standard Drawings. Persons must not rely on these Standard Drawings as the equivalent of, or a substitute for, project-specific design and assessment by an appropriately qualified professional.

Redland SHIRE COUNCIL

FOOTPATH PROFILE POLICY

ROAD/STREET

Standard Drawing

R-RSC-8

A | B

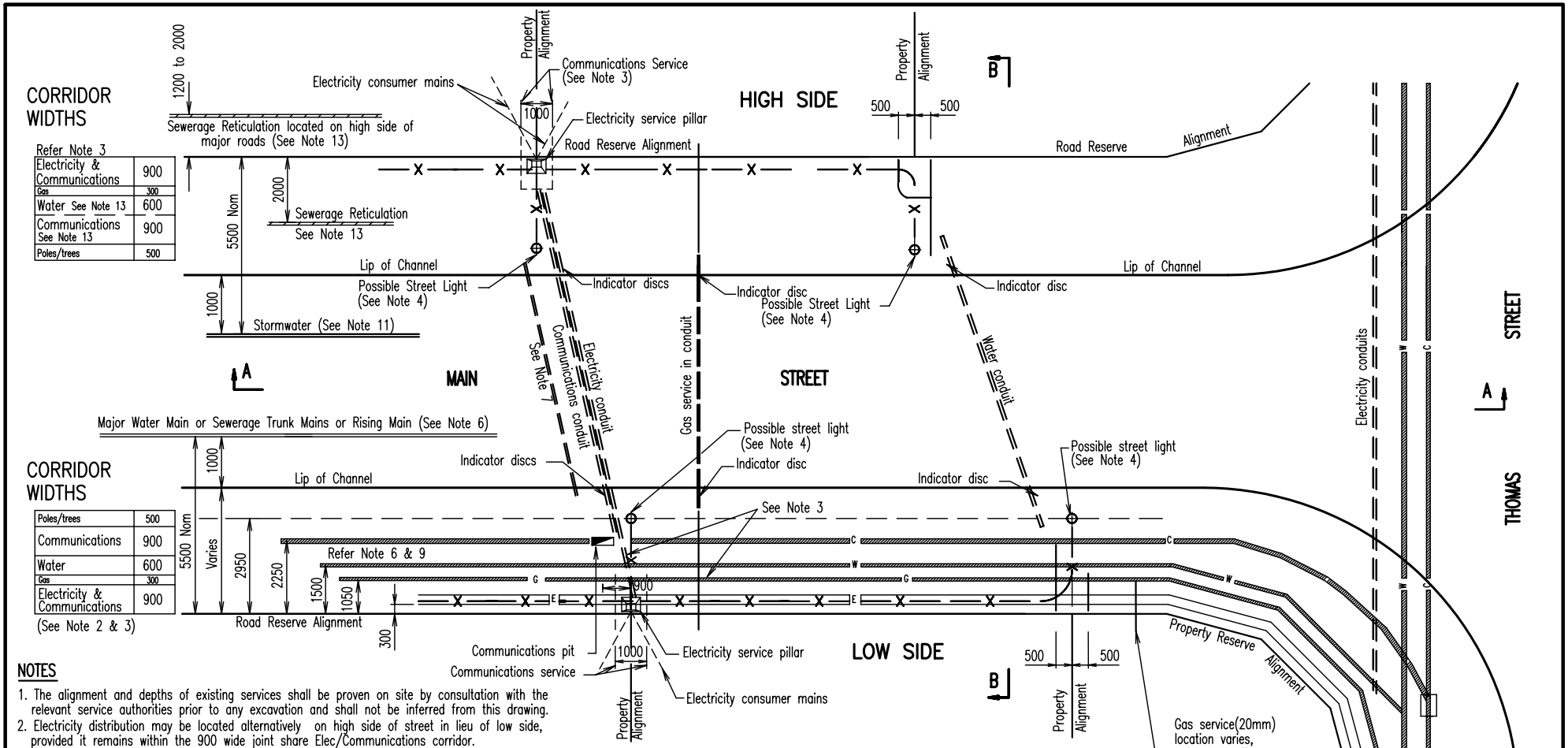

NOTES

1. The alignment and depths of existing services shall be proven on site by consultation with the relevant service authorities prior to any excavation and shall not be inferred from this drawing.
2. Electricity distribution may be located alternatively on high side of street in lieu of low side, provided it remains within the 900 wide joint share Elec/Communications corridor.
3. Refer Energex standard drawings for alignment and for details of joint use trench with communications.
4. Street light poles shall generally be located 1400 behind the lip of channel on verges exceeding 4m in width.
5. Refer Appropriate Standard Drawing for sectional views.
6. Major water mains or trunk sewer or rising mains are to be located on the low side of the street
7. Alternative location for water conduit subject to RSC approval.
8. Conduits to extend 600 beyond back of kerb or 300 beyond Concrete path where applicable.
9. Water mains are located on the low side of the street unless otherwise approved.
10. Trees not to be planted closer than 7000 from street lights.
11. Stormwater mains are located on the high side of the street under the kerb & channel where side inlet chambers are used.
12. Conduits to have a minimum 1000 separation.
13. Sewerage reticulation instead of Communications and Water is located on the verge on the high side of type A and B streets. (Road reserve widths of 18 metres or less). The location is 1200 to 2000 in private property on all higher order roads.
14. All dimensions in millimetres.

LEGEND

- Road crossing conduits
- Gas – G
- Water – W
- Sewerage – S
- Communications – C
- Electricity – E
- Street light – X

E	AMENDED	7/05	
D	AMENDED	11/03	
C	AMENDED	1/02	
B	AMENDED	1/99	
A	ORIGINAL ISSUE	1/98	
REVISIONS		DATE	APPROVED

© REDLAND SHIRE COUNCIL

DISCLAIMER. The authors shall have no liability or responsibility to the user or any other person or entity with respect to any liability, loss or damage caused or alleged to be caused, directly or indirectly, by the adoption and use of these Standard Drawings including, but not limited to, any interruption of service, loss of business or anticipatory profits, or consequential damages resulting from the use of these Standard Drawings. Persons must not rely on these Standard Drawings as the equivalent of, or a substitute for, project-specific design and assessment by an appropriately qualified professional.

Redland SHIRE COUNCIL

PUBLIC UTILITIES IN ROAD RESERVES

TYPICAL SERVICE CORRIDORS AND ALIGNMENTS

ROAD/STREET
Standard Drawing
R–RSC–9

A | B | C | D | E

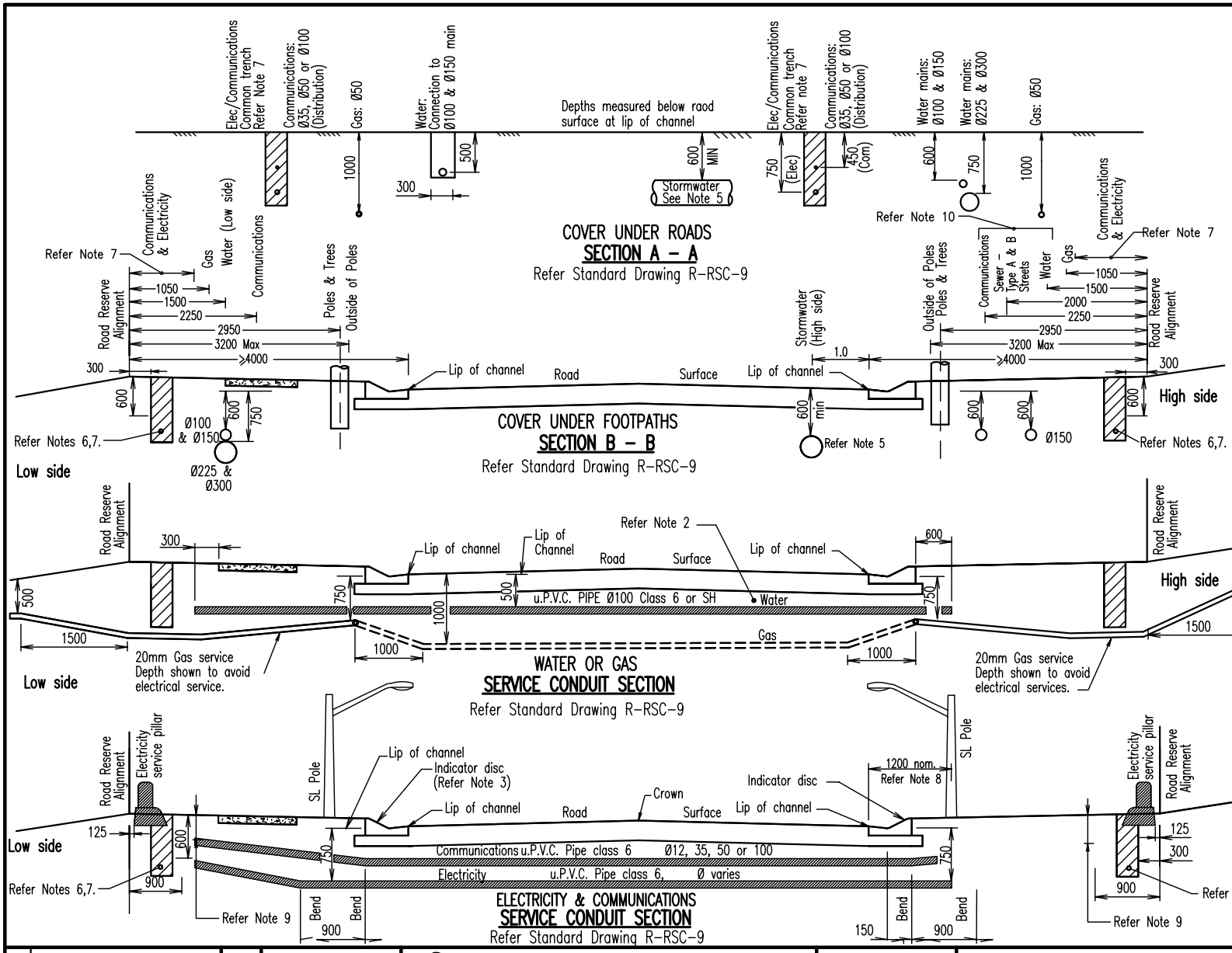

NOTES

1. Electricity conduits adopted are Typically:
   Ø40 for street lighting
   Ø80 for LV, Ø100, 11kV
   Ø100/125 for HV, 33kV
2. Water conduit to be encased in lean mix concrete if less than 150mm cover below the bottom of box.
3. Non-corrosive metal indicator discs to be placed in kerb over all conduits.
4. All depths are from Lip of Channel
5. Stormwater main to be at sufficient depth to have a min. 150 clearance from other services. Stormwater main may also be located under Kerb & Channel when Catch Pits are used as Access Chambers.
6. Electricity distribution may be located alternatively on high side of street in lieu of low side,provided it remains within the 900 wide joint share Elec/Communications corridor.
7. Refer Energex standard drawings for alignment and for details of joint use trench with communications.
8. Alignment is subject to design. Street Lights, Poles shall generally be located 1400 behind lip of channel on verges exceeding 4m in width.
9. For Communication conduits,the following depths apply: Distribution Lines
   – 450mm on verge
   – 600mm under roads
   Main Lines
   – 600mm for verges & under roads
10. Sewer reticulation instead of Communications and Water is located on the verge on the high side of Type A and B streets (Road Reserve width 18 metres or less). The location is 1200 to 2000 in private property on all higher order roads.
11. All dimensions are in millimetres

E	AMENDED	7/05	
D	AMENDED	11/03	
C	AMENDED	1/02	
B	AMENDED	1/99	
A	ORIGINAL ISSUE	1/98	
REVISIONS		DATE	APPROVED

© REDLAND SHIRE COUNCIL

SCLAIMER. The authors shall have liability or responsibility to the user or any other person or entity with respect to any liability, loss or damage caused or alleged to be caused, directly or indirectly, by the adoption and use of these Standard Drawings including, but not limited to, any interruption of service, loss of business or anticipatory profits, or consequential damages resulting from the use of these Standard Drawings. Persons must not rely on these Standard Drawings as the equivalent of, or a substitute for, project-specific design and assessment by an appropriately qualified professional.

Redland SHIRE COUNCIL

PUBLIC UTILITIES IN ROAD RESERVES
TYPICAL SERVICE CONDUIT SECTIONS

ROAD/STREET
Standard Drawing
R-RSC-10

A | B | C | D | E

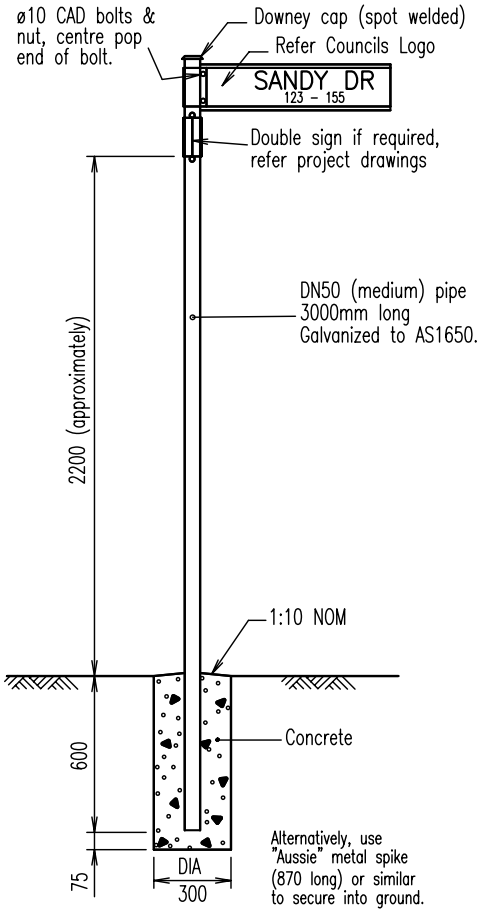

Table of Abbreviations	
Avenue	AV
Court	CT
Crescent	CR
Drive	DR
Esplanade	ESP
Lane	LA
Parade	PDE
Road	RD
Street	ST
Terrace	TCE

Other abbreviations to be approved by Superintendent.

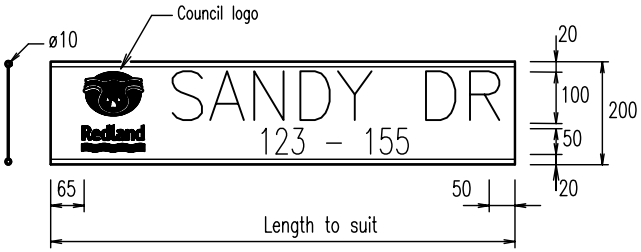

LEGEND

- ● Sign post is to be located 750mm behind nominal kerb line.
- ⊖ Sign post is to be located 2000mm MIN. – 4000mm MAX. from edge of seal, or as directed by the Superintendent.

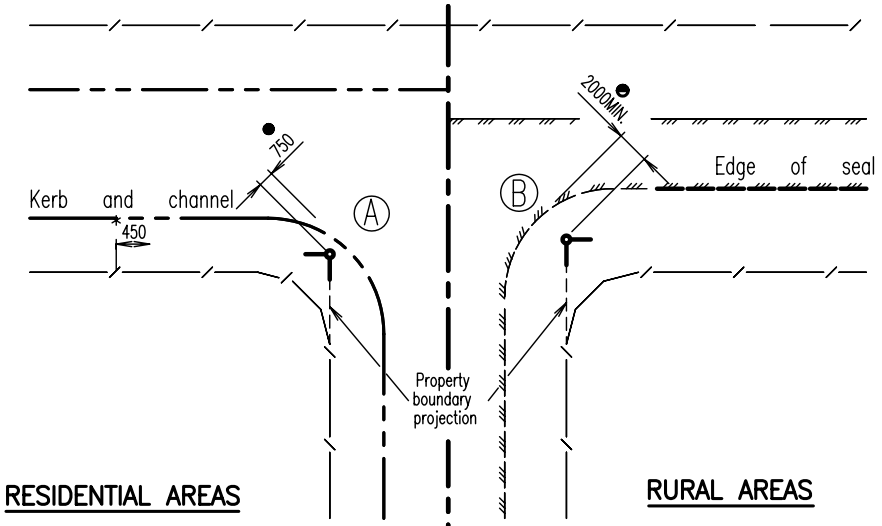

SIGN LOCATIONS

NOTES:

1. Street names must be approved by Council.
2. Name plates: 200mm wide and 3mm thick extruded aluminium or polypropylene section.
3. Bracket: Standard 200mm wide and 3mm thick alumimium extruded bracket (including 2 x ø6 CAD bolts & nuts). CAD bolts and nuts to AS 1897.
4. Letters & Numbers : Class 1 black on Class 1 white reflectorised background (both sides) to AS 1742.5
   Letters: 100mm high, Series B, medium spacing. (spacing may be varied to suit length of street name when approved by Superintendent.)
   Numbers: 50mm high, Series C, narrow spacing.
   All text to AS1744.
5. All signs are to be approved by the Superintendent prior to erection.
6. Signs to be positioned on the side of street/road that provides best visibility.
7. Concrete N20 in accordance with AS 1379 and AS 3600.
8. All dimensions in millimetres.

REVISIONS		DATE	APPROVED
B	AMENDED	1/99	
A	ORIGINAL ISSUE	1/98	

© REDLAND SHIRE COUNCIL

DISCLAIMER. The authors shall have no liability or responsibility to the user or any other person or entity with respect to any liability, loss or damage caused or alleged to be caused, directly or indirectly, by the adoption and use of these Standard Drawings including, but not limited to, any interruption of service, loss of business or anticipatory profits, or consequential damages resulting from the use of these Standard Drawings. Persons must not rely on these Standard Drawings as the equivalent of, or a substitute for, project-specific design and assessment by an appropriately qualified professional.

Redland SHIRE COUNCIL

STREET NAME SIGN

ROAD/STREET
Standard Drawing
R-RSC-11

A | B

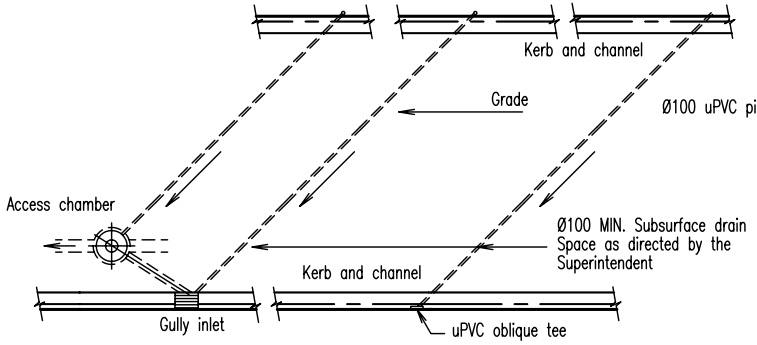

TYPICAL MITRE DRAIN LOCATIONS

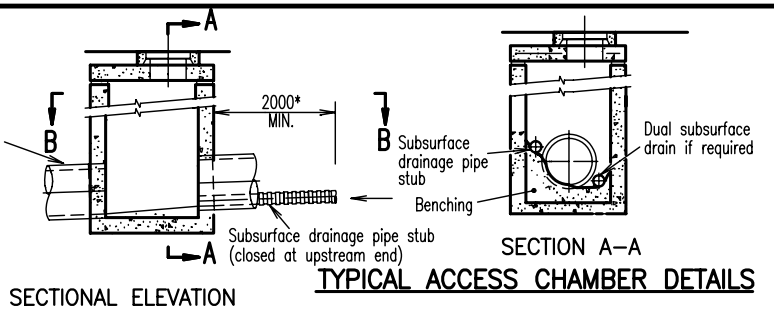

SECTIONAL ELEVATION

SECTION A–A

SECTION C–C

TYPICAL ACCESS CHAMBER DETAILS

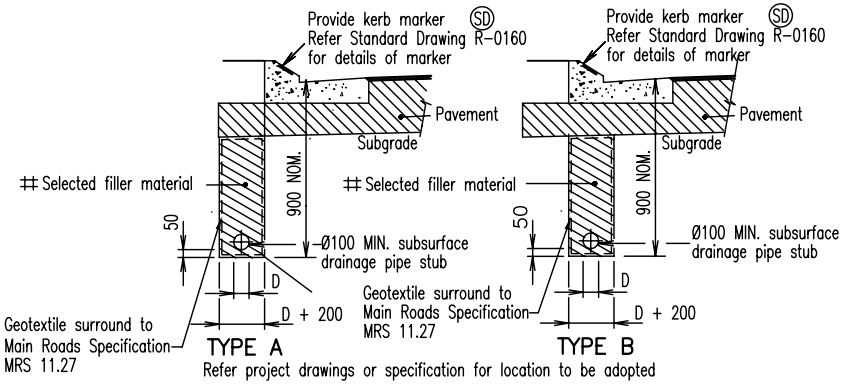

SUBSURFACE PAVEMENT DRAIN

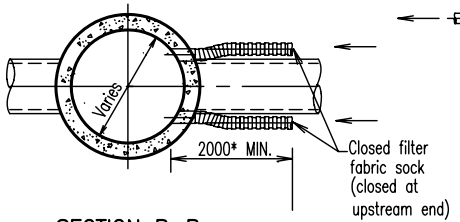

SECTION B–B

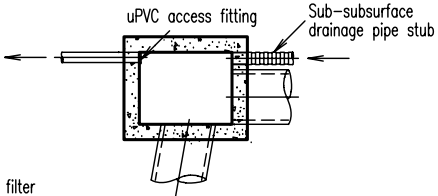

SECTION D–D

LEGEND

⊗ Refer note 7

* Typically 2m min length stub but to extend into mitre drains and clear of drainage structures.

Selected filler material to be 10 to 20mm uniform size crushed screenings.

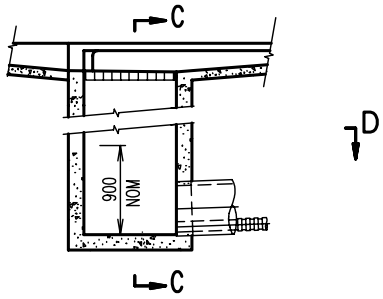

SECTIONAL ELEVATION

TYPICAL GULLY DETAILS

FILTER ON SLOTTED PIPE

A.S. SIEVE SIZE	% BY WT. PASS 'G
9.50 mm	100
4.75 mm	90 – 100
1.18 mm	45 – 80
300 µm	10 – 30
150 µm	0 – 10
75 µm	0 – 1

FILTER MATERIAL GRADING

Unless otherwise specified

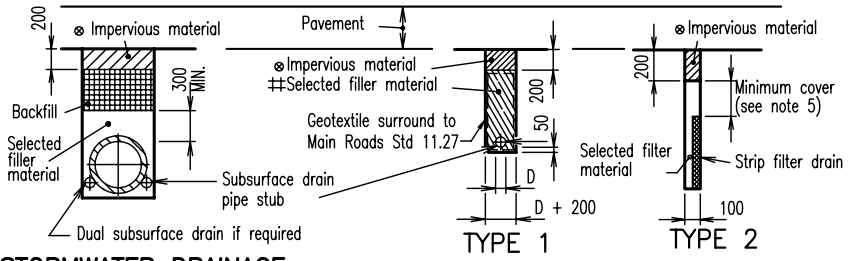

STORMWATER DRAINAGE TRENCHES WITH SUBSURFACE DRAINAGE

STANDARD SUBSURFACE DRAIN

NOTES:

1. All Subsurface drains, polyethylene corrugated slotted pipe to AS 2439.1, discharge at inlet pipe invert level unless detailed otherwise. 0.5% MIN grade.
2. Filter materials not complying with the specified grading requirements may be used when approved by the Superintendent. A geofabric may be used to line trenches where approved by the Superintendent.
3. Concrete anchors N20 in accordance with AS1379 and AS 3600.
4. At 'oblique tee' on subsurface drain cleaning points, the contractor may install Vinidex vertical fittings if approved by the Superintendent.
5. Minimum cover over subsurface drain pipe for various compactors unless approved otherwise:
   Hand held units – 100, Units < 15 tonnes – 200, Units > 15 tonnes – 300
6. 'D' = 100 NOM. unless otherwise specified.
7. Impervious material to be provided where subsurface drainage is not under a pavement. When impervious material is omitted the backfill / selected filter material shall extend to underside of pavement.
8. All Sub surface drainage pipes to be installed in approved filter fabric sock.
9. Location of Subsurface Pavement Drainange is to be in accordance with Type B unless otherwise approved.

B	AMENDED	02/05	
A	ORIGINAL ISSUE	1/02	
REVISIONS		DATE	APPROVED

© REDLAND SHIRE COUNCIL

DISCLAIMER. The authors shall have no liability or responsibility to the user or any other person or entity with respect to any liability, loss or damage caused or alleged to be caused, directly or indirectly, by the adoption and use of these Standard Drawings including, but not limited to, any interruption of service, loss of business or anticipatory profits, or consequential damages resulting from the use of these Standard Drawings. Persons must not rely on these Standard Drawings as the equivalent of, or a substitute for, project-specific design and assessment by an appropriately qualified professional.

Redland SHIRE COUNCIL

SUBSURFACE DRAINAGE

ROAD/STREET Standard Drawing

R-RSC-12

A | B

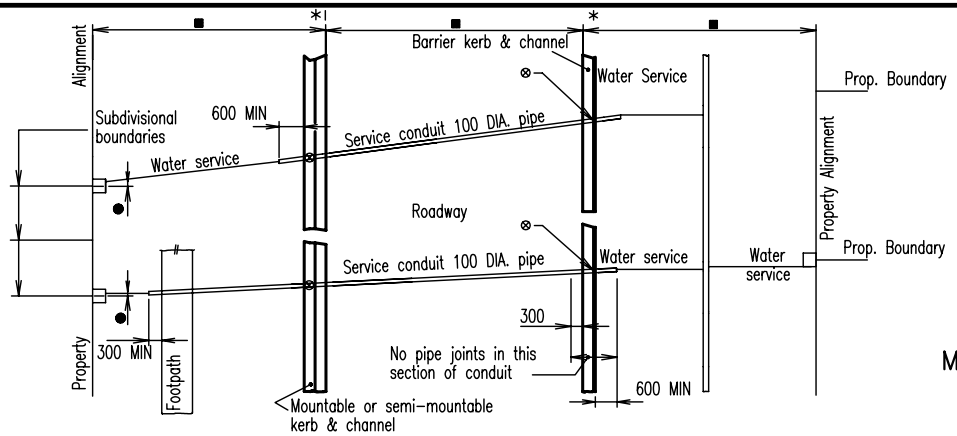

PLAN

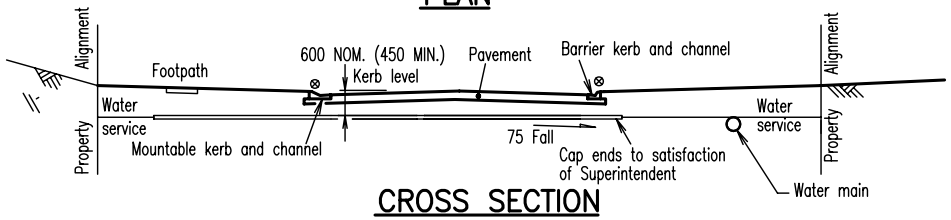

CROSS SECTION

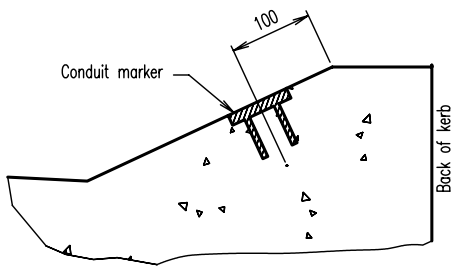

SECTION A–A
MOUNTABLE OR SEMI–MOUNTABLE KERB

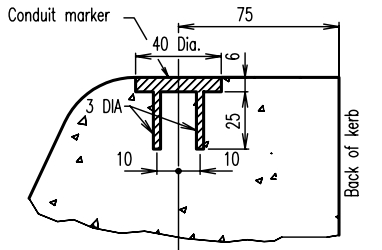

SECTION A–A
BARRIER KERB

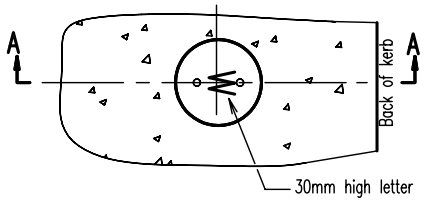

PLAN

BRASS OR STAINLESS STEEL SERVICE CONDUIT MARKER

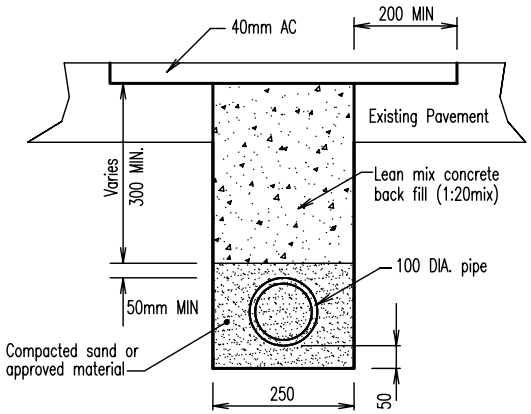

EXISTING ROAD CONSTRUCTION

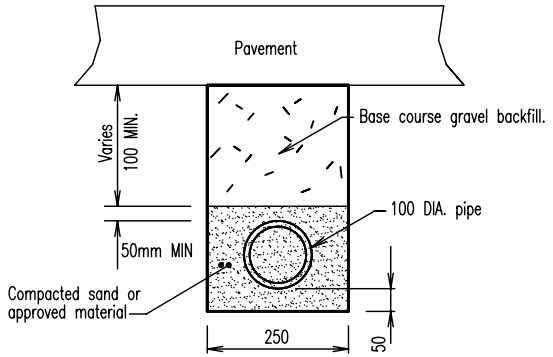

NEW ROAD CONSTRUCTION

TYPICAL SECTIONS – SERVICE CONDUITS

LEGEND

- ∗ Lip of Channel
- ⊗ Service conduit marker
- ■ Refer project drawings.
- ● Service conduit to be located in a straight line between opposite side property boundaries.
- —— SC —— —— Service conduits (on project drawings).

NOTES:

1. Trimming and compaction of the subgrade to be completed and approved before excavation for service conduits is commenced. Excavated material shall be thrown on the footpath and not on the subgrade.
2. Service conduit pipe alternatives :– 100 DIA F.R.C. class 2. (2s)
   100 DIA uPVC, Class 6 or SH
3. Where concrete footpaths/cyclepaths exist or are planned, the service conduit is to extend past the far side of the path by 300mm.
4. Marker details may be varied if approved.
5. All dimensions in millimetres.

C	AMENDED	1/02	
B	AMENDED	1/99	
A	ORIGINAL ISSUE	1/98	
REVISIONS		DATE	APPROVED

© REDLAND SHIRE COUNCIL

DISCLAIMER. The authors shall have no liability or responsibility to the user or any other person or entity with respect to any liability, loss or damage caused or alleged to be caused, directly or indirectly, by the adoption and use of these Standard Drawings including, but not limited to, any interruption of service, loss of business or anticipatory profits, or consequential damages resulting from the use of these Standard Drawings. Persons must not rely on these Standard Drawings as the equivalent of, or a substitute for, project–specific design and assessment by an appropriately qualified professional.

Redland SHIRE COUNCIL

WATER SERVICE CONDUITS

ROAD/STREET
Standard Drawing
R-RSC-13

A | B | C

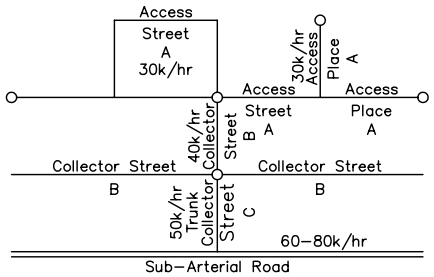

STREET CLASSIFICATIONS

NOTES

1. Median may be narrowed to 2.4 minimum away from intersections to ensure safe staging for pedestrians and cyclists.
2. All lanes adjacent to kerb and channel except or type A and B streets, are multipurpose Bicycle lanes, Breakdown lanes and may be used for Bus stops which can be indented where insufficeint width is available.

* The reserve width and carriageway configuration are variable and subject to road classification and planning layout requirements, including bikeway alignments and bus setdown areas.
\+ Bus Route
% Barrier Kerb & Channel
\# Residential Path and or bikeway on both verges
ø Excludes schools, commercial sites etc (Min frontage 50m)
Shared use path on verge
⊕ Bicycle lane on road pavement

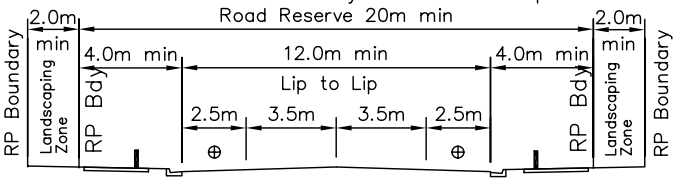

Max. 15 000 VPD

#%+* 2 LANE SUB–ARTERIAL ROAD – UNDIVIDED

ø (NO RESIDENTIAL FRONTAGE ACCESS)

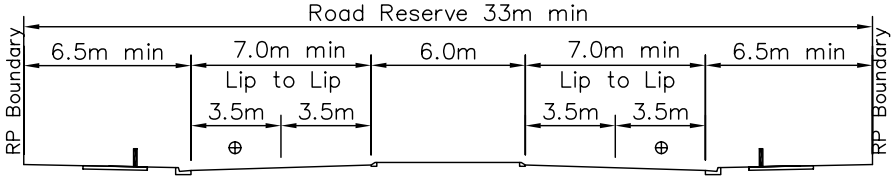

Max. 15 000 VPD

#%+* 2 LANE SUB–ARTERIAL ROAD – DIVIDED

(WITH FRONTAGE ACCESS)

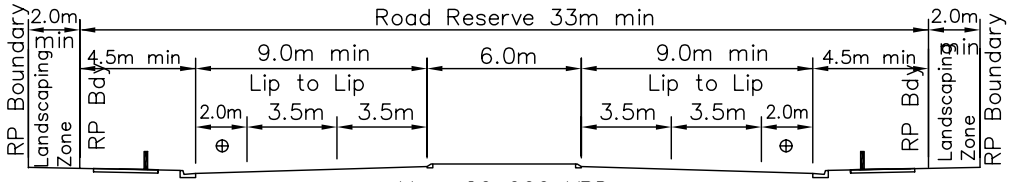

Max. 20 000 VPD

#%+* 4 LANE SUB–ARTERIAL ROAD – DIVIDED

ø (NO RESIDENTIAL FRONTAGE ACCESS)

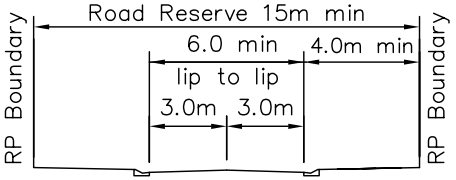

Max. 1000 VPD

RESIDENTIAL ACCESS PLACE & ACCESS STREET – TYPE A

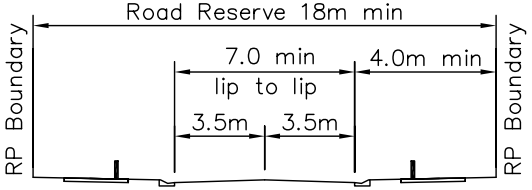

Max. 3000 VPD

RESIDENTIAL COLLECTOR STREET – TYPE B

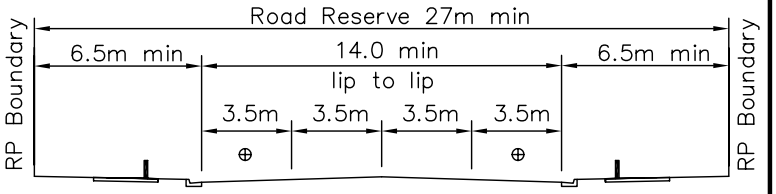

Max. 10 000 VPD

#%+* TRUNK COLLECTOR STREET – TYPE C

(WITH FRONTAGE ACCESS)

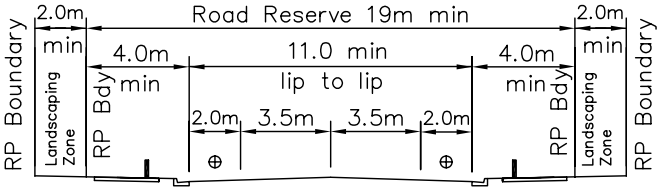

Max. 10 000 VPD

#%+* TRUNK COLLECTOR STREET – TYPE C

ø (NO RESIDENTIAL FRONTAGE ACCESS)

B	AMENDED	2/05	
A	ORIGINAL ISSUE	1/02	
	REVISIONS	DATE	APPROVED

© REDLAND SHIRE COUNCIL

DISCLAIMER. The authors shall have no liability or responsibility to the user or any other person or entity with respect to any liability, loss or damage caused or alleged to be caused, directly or indirectly, by the adoption and use of these Standard Drawings including, but not limited to, any interruption of service, loss of business or anticipatory profits, or consequential damages resulting from the use of these Standard Drawings. Persons must not rely on these Standard Drawings as the equivalent of, or a substitute for, project–specific design and assessment by an appropriately qualified professional.

Redland SHIRE COUNCIL

ROAD TYPES AND MINIMUM ROAD WIDTHS

ROAD/STREET
Standard Drawing
R–RSC–15

A | B

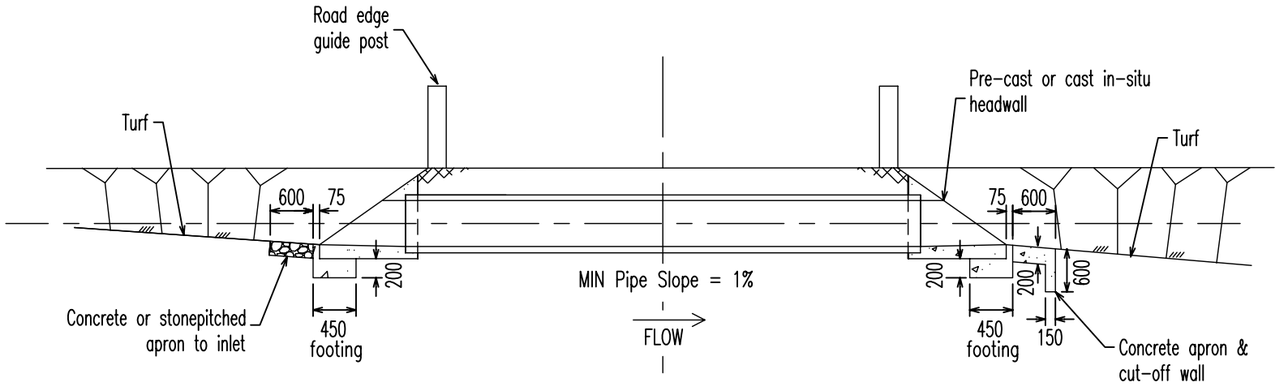

SECTION A–A

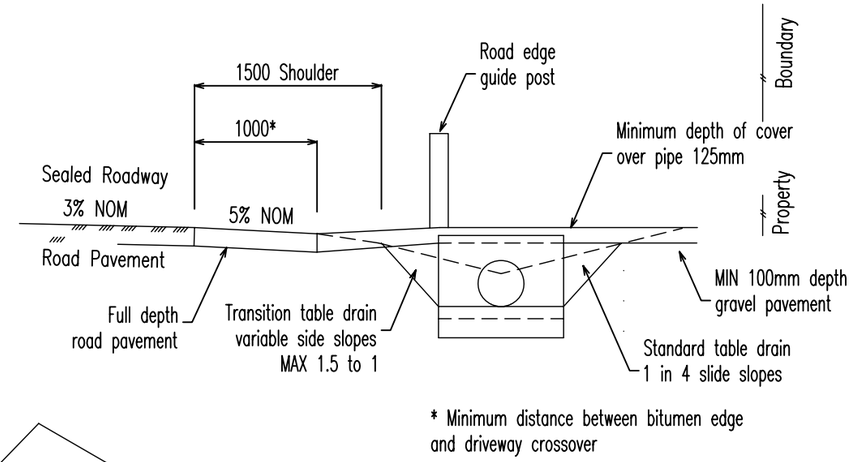

* Minimum distance between bitumen edge and driveway crossover

SECTION B–B

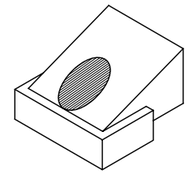

ISOMETRIC VIEW
TYPICAL HEADWALL

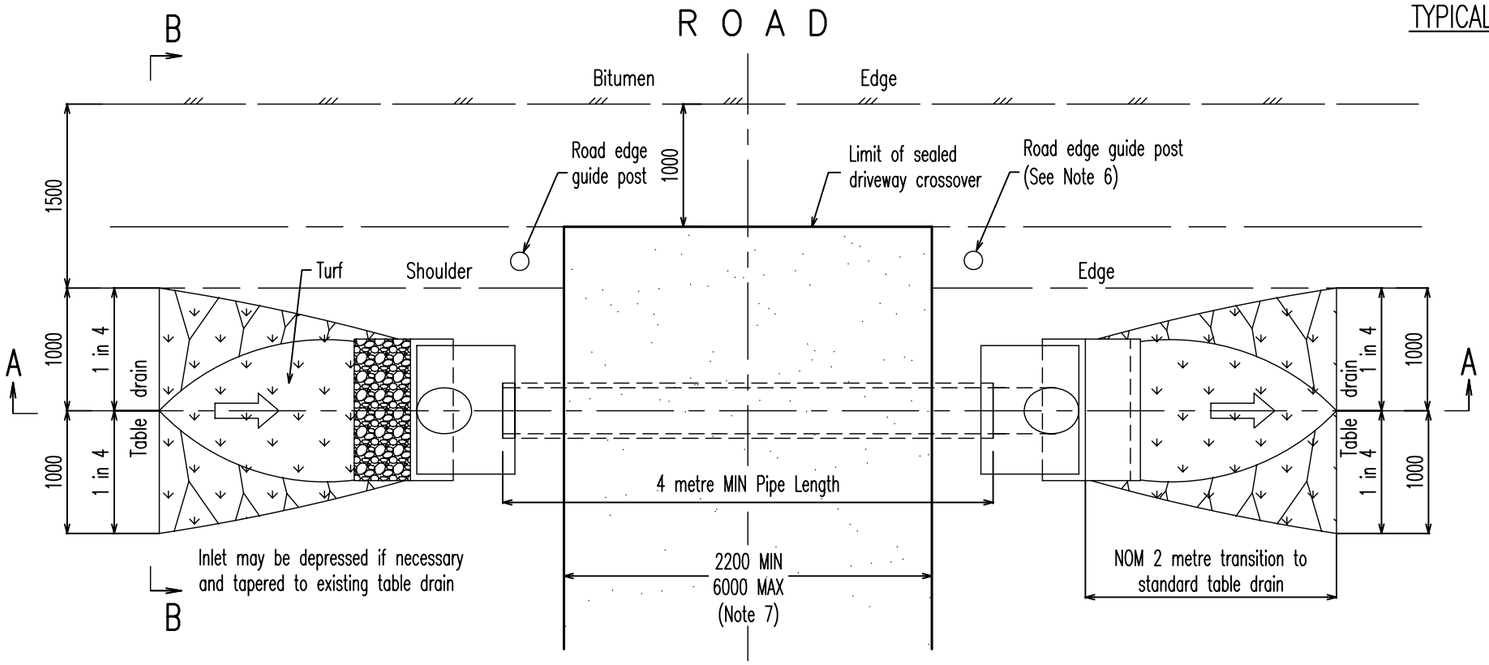

PLAN

NOTES:

1. The length of pipe may be increased provided approval is granted
2. Minimum pipe diameter - 300mm
   Maximum pipe diameter - 450mm
   Minimum pipe length - 4 metres
   Minimum pipe slope - 1%
3. Twin pipes may be used where approved.
4. Disturbed earthworks at inlet and outlet are to be protected by turfing.
5. The location of Rural Driveway Crossovers are to conform to AS2890.1 i.e. the absolute minimum vertical and horizontal stopping sight distance being :-

Frontage Road Speed (km/h)	Min Sight Distance
50	40m
60	55m
70	70m
80	95m

Driveway crossovers are to be located a mininmum of 30m from a road intersection.

6. Guide posts are to be located 1.2m from the bitumen edge of roadway
7. Design Standard for Self-assessable development. Widths in excess of 6000mm (6 metres), will require a code assessable Development Application (see Part 7 Division 4 - Domestic Driveway Crossover Code).

B	AMENDMENT	12/07	
A	ORIGINAL ISSUE	7/05	
	REVISIONS	DATE	APPROVED

© REDLAND SHIRE COUNCIL

DISCLAIMER. The authors shall have no liability or responsibility to the user or any other person or entity with respect to any liability, loss or damage caused or alleged to be caused, directly or indirectly, by the adoption and use of these Standard Drawings including, but not limited to, any interruption of service, loss of business or anticipatory profits, or consequential damages resulting from the use of these Standard Drawings. Persons must not rely on these Standard Drawings as the equivalent of, or a substitute for, project-specific design and assessment by an appropriately qualified professional.

Redland SHIRE COUNCIL

DOMESTIC DRIVEWAY CROSSOVER FOR PIPE CROSSINGS

ROAD/STREET
Standard Drawing
R-RSC-16

A | B

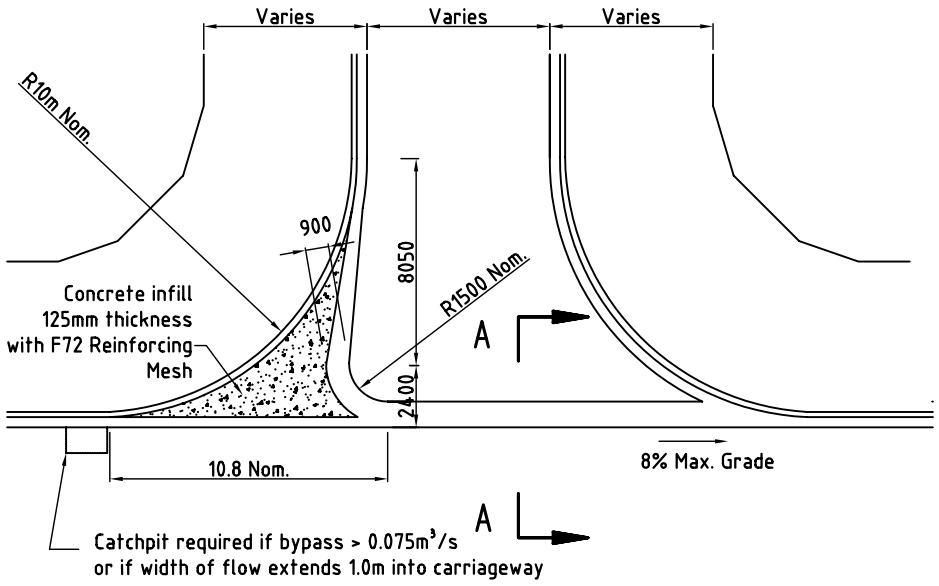

PLAN
Scale 1:200

INVERT DETAIL FOR BARRIER KERB & CHANNEL

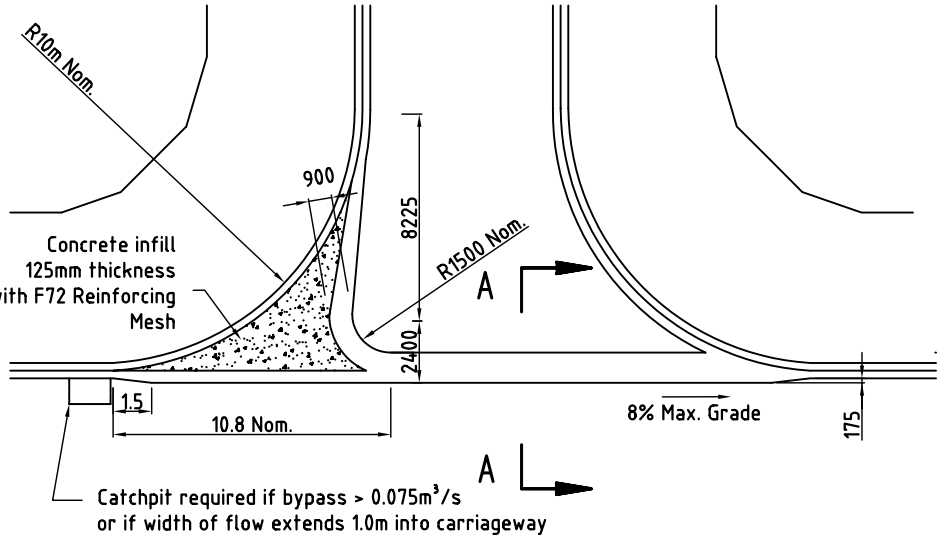

PLAN
Scale 1:200

INVERT DETAIL FOR MOUNTABLE TYPE KERB & CHANNEL

LEGEND

- * Lip line for setting out.
- ▪ Channel, invert width - refer project drawings.
- ● 10mm Radius.
- □ 20mm Radius.
- ◉ 175 where specified for commercial and industrial applications, refer project drawings.

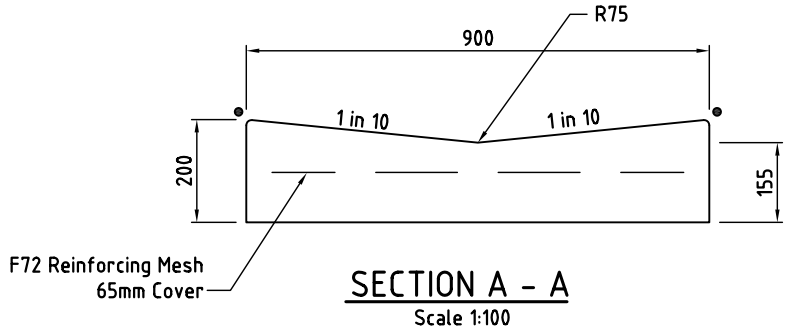

SECTION A - A
Scale 1:100

NOTES

1. All materials and construction shall comply with AS 2876 except for dimensionson this drawing.
2. All concrete S32 MIN (refer project documentation) in accordance with AS 1379 and AS 3600
3. Reinforcement bars to AS 1302, trench fabric to AS 1304.
4. JOINTS: Contraction Joints to be cut through full depth of Kerb & Channel at 3m centres.
   : Expantion joints required at 30m centres and at tangent points of Kerb return. Provide 10mm thick full depth closed cell cross linked polyethylene foam (85-150kg/m³)
5. All dimensions in millimetres.

A	ORIGINAL ISSUE	05/05	
	REVISIONS	DATE	APPROVED

© REDLAND SHIRE COUNCIL

DISCLAIMER. The authors shall have no liability or responsibility to the user or any other person or entity with respect to any liability, loss or damage caused or alleged to be caused, directly or indirectly, by the adoption and use of these Standard Drawings including, but not limited to, any interruption of service, loss of business or anticipatory profits, or consequential damages resulting from the use of these Standard Drawings. Persons must not rely on these Standard Drawings as the equivalent of, or a substitute for, project-specific design and assessment by an appropriately qualified professional.

Redland SHIRE COUNCIL

INTERSECTION CONCRETE INVERT DETAILS

ROAD/STREET
Standard Drawing
R-RSC-21
A

Std. Dwg. No.	Descriptions
	Redland Shire Council Approved Standard Drawings
	IPWEAQ Drawings
D-0010	Access Chamber Details Dia. 1050–2100
D-0011	Access Chamber Roof Slabs Dia. 1050–2100
D-0012	Access Chamber Roof Slabs Dia. 1500 Extended 600 & 900
D-0013	Access Chamber Roof Slab Rectangular Standard Reinforcement
D-0014	Access Chamber Cast Iron Cover and Frame; C.I. Concrete Filled Cover
D-0015	Access Chamber Cast Iron Cover and Frame Bolt Down
D-0016	Access Chamber Step Irons
D-0017	Access Chamber Roof Slab – Rectangular Fabric Reinforced
D-0031	Excavation, Bedding and Backfilling of Precast Box Culverts
D-0050	Field Inlet and Overflow Gully Type 1 and Type 2
D-0064	Drainway Stormwater Inlet Components
D-0065	Precast Concrete Side Inlet Gully Components
D-0066	Precast Stormwater Inlet, Test Load Procedure
D-0067	Precast Stormwater Inlet, Construction Setting Out, Barrier/Mountable Kerb and Channel
D-0080	Inlets and Outlets to Stormwater Drains (Concrete)
D-0081	Inlets and Outlets to Stormwater Drains (Stonepitched)
D-0040	Sediment Control Devices, Sediment Fence, Entry/Exit Sediment Trap.
D-0041	Sediment Control Devices, Kerb and Field Inlets, Check Dams and Straw Bale Bank
	Redland Shire Council Drawings
D-RSC-2	Gully – Roadway Type – Precast Lintel Details
D-RSC-3	Gully – Roadway Type – Channel Lip in Line
D-RSC-4	Gully – Roadway Type – Precast Units; Anti – Ponding
D-RSC-6	Precast Gully and Access Chamber combination.
D-RSC-7	Sample As Constructed Plan – Stormwater & Roofwater Drainage
D-RSC-8	Stormwater Flow Dissipator – Typical Layout Details
D-RSC-9	Stormwater Flow Dissipator Unit Structure Details
D-RSC-10	Stormwater Flow Dissipator Gate, Trash Rack & Access Unit Details
D-RSC-11	Excavation, Bedding and Backfill
D-RSC-12	Lip in Line Catchpits – Hydraulic Capture Charts – Type M1 Kerb & Channel on Grade – 2400mm Lintel
D-RSC-13	Lip in Line Catchpits – Hydraulic Capture Charts – Type M1 Kerb & Channel on Grade – 3600mm Lintel
D-RSC-14	Lip in Line Catchpits – Hydraulic Capture Charts – Type B1 Kerb & Channel on Grade – 2400mm Lintel
D-RSC-15	Lip in Line Catchpits – Hydraulic Capture Charts – Type B1 Kerb & Channel on Grade – 3600mm Lintel
D-RSC-16	Lip in Line Catchpits – Hydraulic Capture Charts – Type M1 Kerb & Channel Sag Conditions – All Lintels
D-RSC-17	Lip in Line Catchpits – Hydraulic Capture Charts – Type B1 Kerb & Channel Sag Conditions – All Lintels
D-RSC-18	Field Inlet Pit Dome Type Cover (Non Pedestrian Areas)

C	AMENDED	2/05	
B	AMENDED	1/02	
A	ORIGINAL ISSUE	1/98	
REVISIONS		DATE	APPROVED

© REDLAND SHIRE COUNCIL

DISCLAIMER. The authors shall have no liability or responsibility to the user or any other person or entity with respect to any liability, loss or damage caused or alleged to be caused, directly or indirectly, by the adoption and use of these Standard Drawings including, but not limited to, any interruption of service, loss of business or anticipatory profits, or consequential damages resulting from the use of these Standard Drawings. Persons must not rely on these Standard Drawings as the equivalent of, or a substitute for, project-specific design and assessment by an appropriately qualified professional.

Redland SHIRE COUNCIL

INDEX
STANDARD DRAWINGS
DRAINAGE

DRAINAGE
Standard Drawing
D-RSC-1

A B C

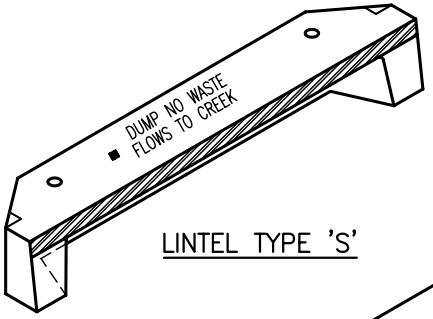

LINTEL TYPE 'S'

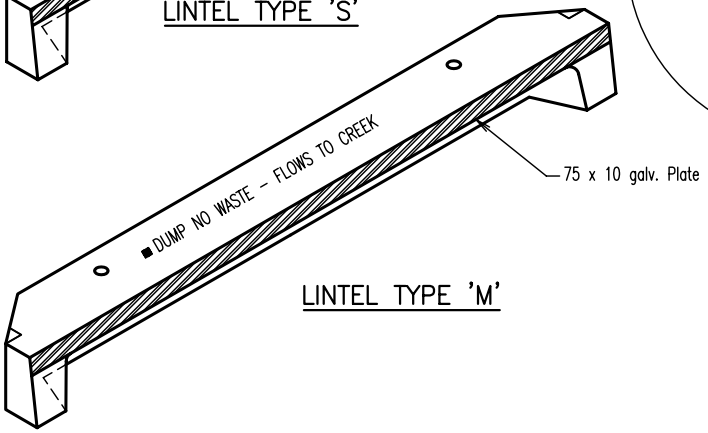

LINTEL TYPE 'M'

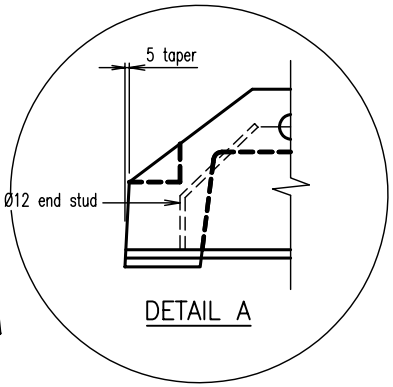

DETAIL A

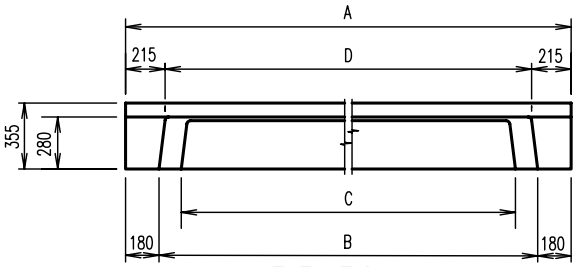

ELEVATION

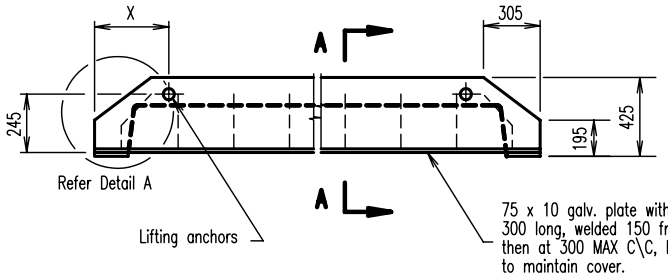

PLAN

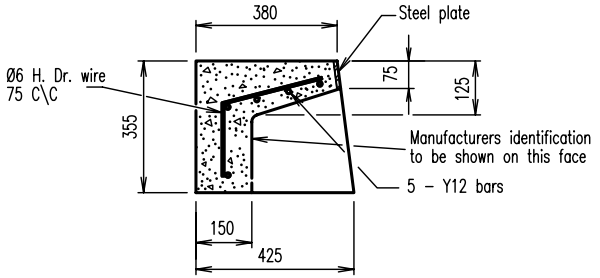

SECTION A–A

NOTES

1. The minimum design load rating shall be class C.
2. Concrete to be minimum grade N40 in accordance with AS 1379 and AS 3600.
3. Each lifting anchor to be "swiftlift" or equivalent 1.3 tonne, galvanized to AS 1214 and fitted to manufacturers specification.
4. Reinforcing steel Grade 400 to AS 1302. Place centrally, 40 MIN end cover.
5. All steel flats Grade 250 to AS 3678.
6. All welds to AS 1554.
7. H. Dr. wire to AS 1310.
8. Steel plate hot dip galvanized to AS 4680.
9. All dimensions in millimeters.

LEGEND

■ Text 40mm high letters imprinted 5mm into concrete.

LINTEL	A	B	C	D	X	MASS (kg)
S	2400	2040	1800	1970	400	445
M	3600	3240	3000	3170	690	550

B	AMENDED	1/02	
A	COUNCIL ISSUE	1/98	
REVISIONS		DATE	APPROVED

© REDLAND SHIRE COUNCIL

DISCLAIMER. The authors shall have no liability or responsibility to the user or any other person or entity with respect to any liability, loss or damage caused or alleged to be caused, directly or indirectly, by the adoption and use of these Standard Drawings including, but not limited to, any interruption of service, loss of business or anticipatory profits, or consequential damages resulting from the use of these Standard Drawings. Persons must not rely on these Standard Drawings as the equivalent of, or a substitute for, project-specific design and assessment by an appropriately qualified professional.

Redland SHIRE COUNCIL

GULLY – ROADWAY TYPE PRECAST LINTEL DETAILS

DRAINAGE
Standard Drawing
D–RSC–2

A | B

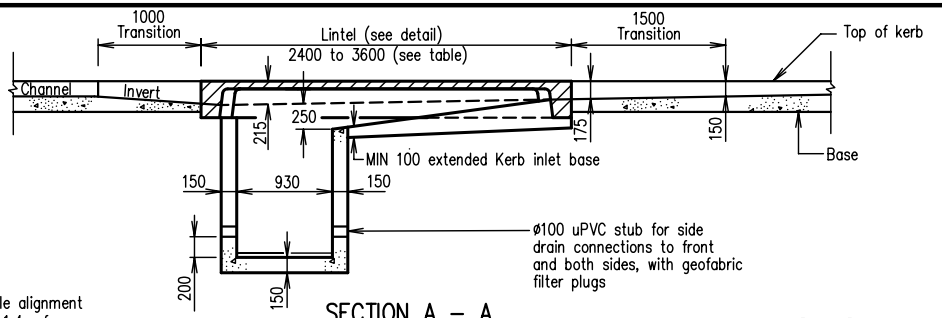

SECTION A – A

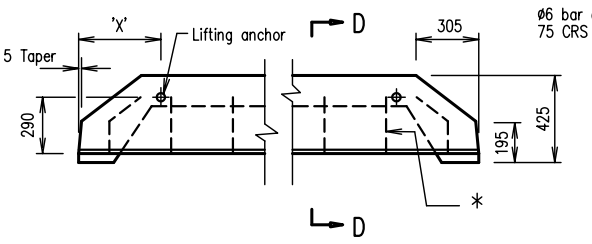

PLAN

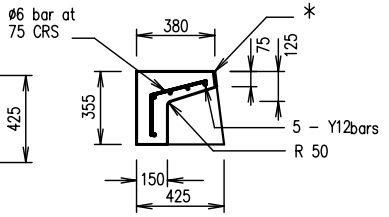

SECTION D – D

* 75 x 10 GALV. PL. with ø10 studs 300 long, weld on 150 from the end, then at 300 centres. Bend end studs to maintain cover.

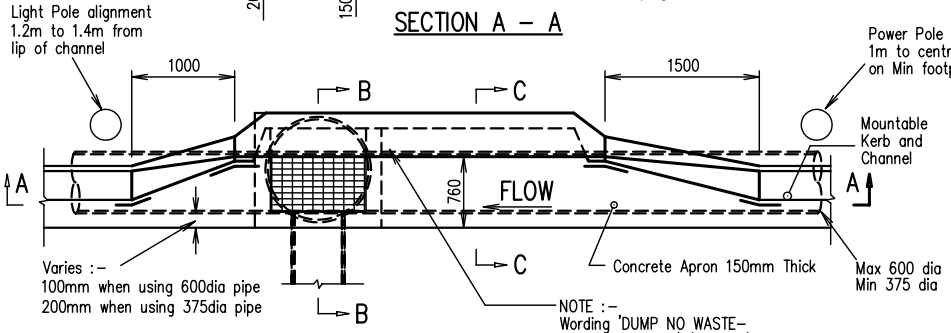

TYPICAL INLET ON GRADE

Type R (Flow from Right hand side)

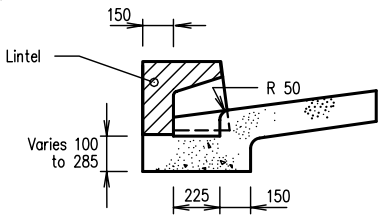

SECTION C – C

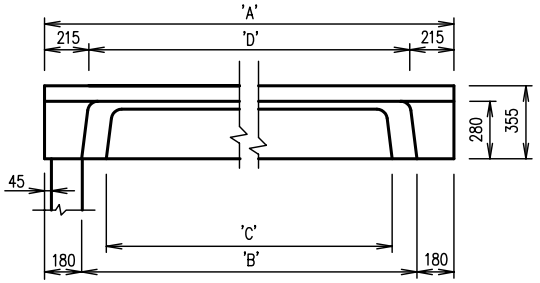

ELEVATION

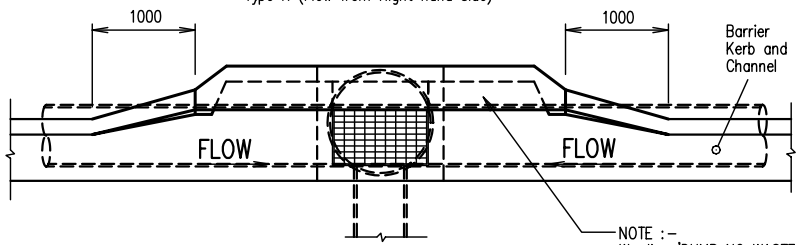

TYPICAL INLET IN SAG

PRECAST LINTEL DETAIL

TYPE	'A'mm	'B'mm	'C'mm	'D'mm	'X'mm	MASS(kg)
S (Small)	2400	2040	1800	1970	400	445
M (Medium)	3600	3240	3000	3170	690	550

When ordering specify as follows :– Type (length) and direction of flow.
e.g. Type SR (meaning 2400 long with flow from Right hand side)
Type MS (meaning 3600 long in Sag with flow from both directions)

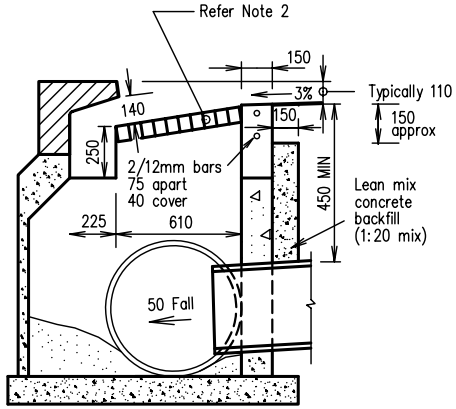

SECTION B – B

NOTES

1. The catchpit may be cast–in–situ or precast. This drawing indicates a cast–in–situ catchpit with a precast lintel.
2. 900 x 600 clear opening gully grate frame to be cast into concrete. Gully grate and frame to be Class D to AS3996 and have Australian Standardsmark certification cleary shown.
3. Precast concrete to be minimum Grade N40 and conform to AS 3600 and 1379.
4. Each lifting anchor to be "Swiftlift" or equivalent 1.3 tonne Galvanized (Conforming to AS 1214) and fitted to manufacturers specification.
5. Reinforcing placed centrally, 40 MIN end cover.
6. Reinforcement steel grade 400 to conform to AS 4671.
7. Casting to conform to AS 1830 and AS 1831.
8. Catchpits on Queensland Transport Infrastructure shall be subject to Queensland Transport approval.
9. RSC approved gully pit capacity charts with 10% blockage factor applies for on grade pits.
10. All dimensions in mm.

REVISIONS		DATE	APPROVED
C	AMENDED	1/02	
B	AMENDED	1/99	
A	ORIGINAL ISSUE	1/98	

© REDLAND SHIRE COUNCIL

DISCLAIMER. The authors shall have no liability or responsibility to the user or any other person or entity with respect to any liability, loss or damage caused or alleged to be caused, directly or indirectly, by the adoption and use of these Standard Drawings including, but not limited to, any interruption of service, loss of business or anticipatory profits, or consequential damages resulting from the use of these Standard Drawings. Persons must not rely on these Standard Drawings as the equivalent of, or a substitute for, project–specific design and assessment by an appropriately qualified professional.

Redland SHIRE COUNCIL

GULLY–ROADWAY TYPE CHANNEL LIP IN LINE

DRAINAGE
Standard Drawing
D–RSC–3
A | B | C

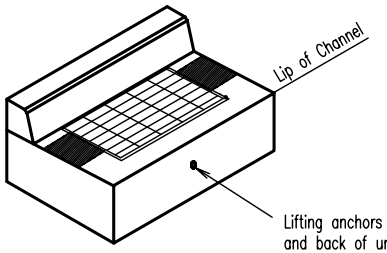

ISOMETRIC VIEW

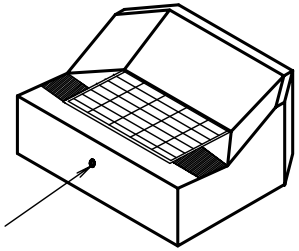

ISOMETRIC VIEW

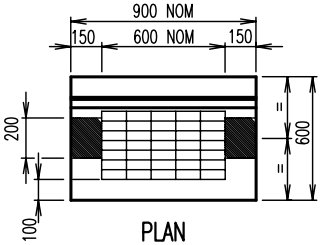

PLAN

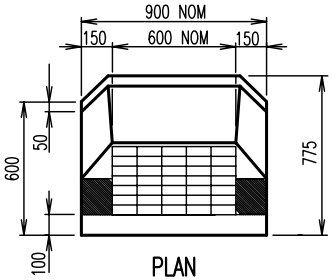

PLAN

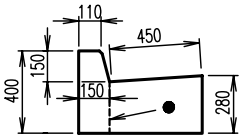

END ELEVATION

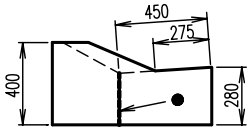

END ELEVATION

BARRIER KERB

MOUNTABLE KERB

ANTI–PONDING GULLIES

(No Lintel)

Refer note 12

COMPONENT	PRECAST GULLY
Proof Load	50 kN
Ultimate Load	75 kN

TABLE A
LOADING CRITERIA

LEGEND

■ Load test area (200 x 150), refer note 3.

● Manufacturers' identification to be shown on this face.

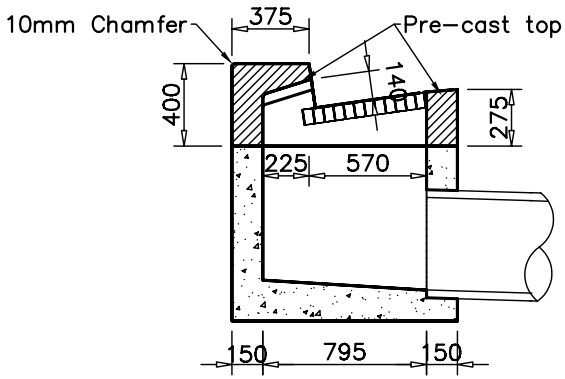

SECTION A–A

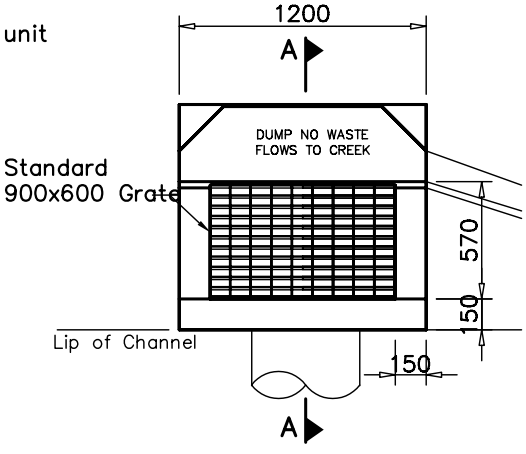

PLAN

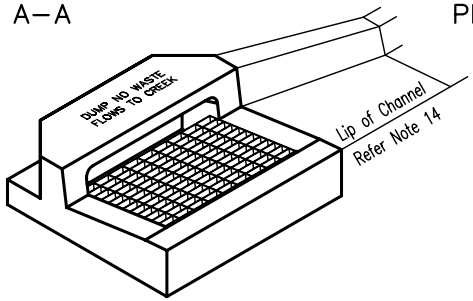

ISOMETRIC VIEW

ANTI–PONDING GULLY

(With Back Inlet)

NOTES

1. Concrete in accordance with AS 1379 & AS 3600, Castings to AS 1830.
2. Each lifting anchor to be "swiftlift" or equivalent 1.3 tonne, galvanised to AS 1214 and fitted to manufacturers' specification.
3. Reinforcement to AS 1302 shall be provided by the designer to obtain the strength required to pass the appropriate test criteria.
   The load detailed in Table A shall be applied to each location, separate tests at each location.
4. All steel flats Grade 250 to AS 3678.
5. All welds to AS 1554.
6. H. Dr. wire to AS 1303.
7. Steel plate hot dip galvanised to AS 4680.
8. Grate and frame Class D to AS 3996.
9. Grate frame to be cast into concrete.
10. Precast concrete units must be approved by the Superintendent prior to use.
11. Provide 10mm mortar (1 cement : 3 fine sand) joint between gully pit and precast units.
12. Maximum depth to invert shall be 1000 if gully does not have a back inlet.
13. Precast units to be placed on cast in–situ Chamber. Chamber wall wall thickness to match unit.
14. Kerb and Channel to be transitioned over 750mm to match inlet of gully.
15. All dimensions in millimetres.

REVISIONS	DATE	APPROVED
B AMENDED	1/02	
A ORIGINAL ISSUE	1/98	

© REDLAND SHIRE COUNCIL

DISCLAIMER. The authors shall have no liability or responsibility to the user or any other person or entity with respect to any liability, loss or damage caused or alleged to be caused, directly or indirectly, by the adoption and use of these Standard Drawings including, but not limited to, any interruption of service, loss of business or anticipatory profits, or consequential damages resulting from the use of these Standard Drawings. Persons must not rely on these Standard Drawings as the equivalent of, or a substitute for, project–specific design and assessment by an appropriately qualified professional.

Redland SHIRE COUNCIL

GULLY – ROADWAY TYPE
PRECAST UNITS
ANTI–PONDING

DRAINAGE
Standard Drawing
D–RSC–4

A B

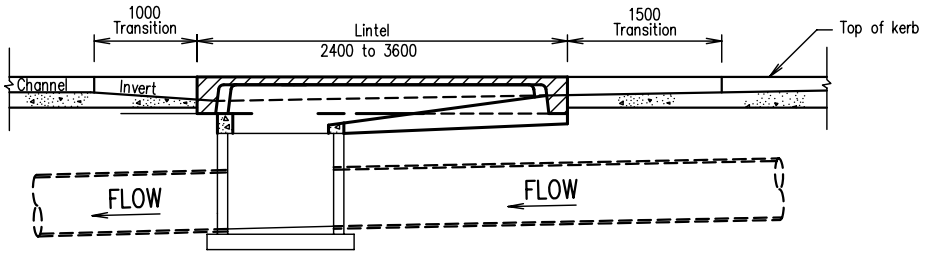

SECTION A – A

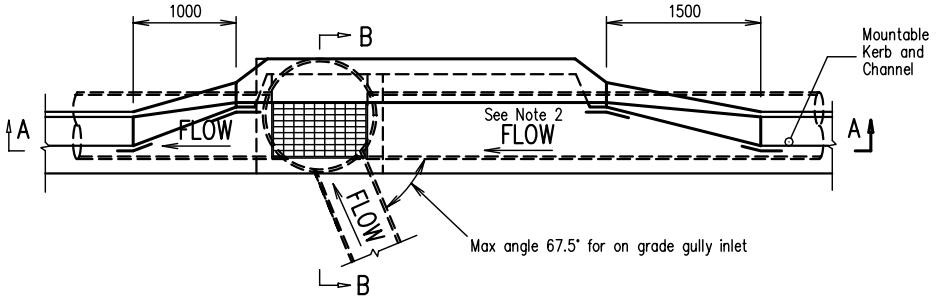

TYPICAL INLET ON GRADE

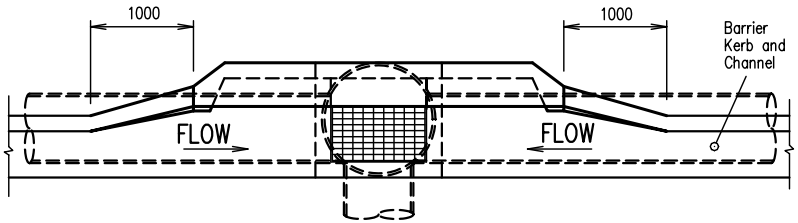

TYPICAL INLET IN SAG

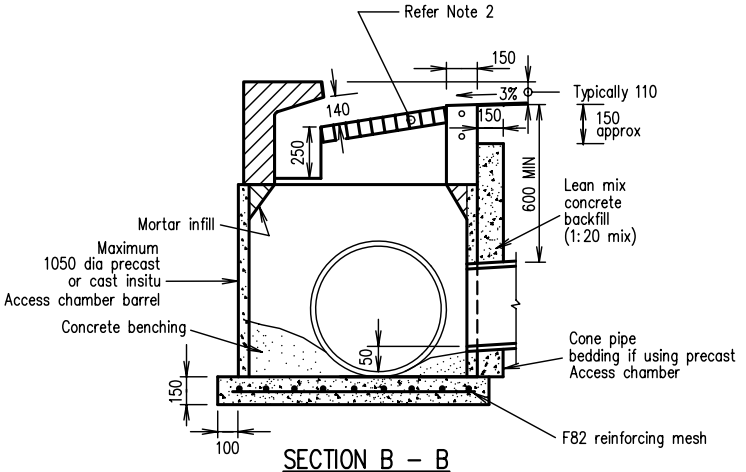

SECTION B – B

NOTES

1. The catchpit and or the access chamber barrel may be cast–in–situ or precast.
2. The maximum size pipe connected to the chamber is 600 mm diameter
3. 900 x 600 clear opening gully grate frame to be cast into concrete. Gully grate and frame to be Class D to AS3996 and have Australian Standards mark certification cleary shown. (Refer standard drawing R–RSC–3)
4. Precast concrete to be minimum Grade N40 and conform to AS 3600 and AS 1379.
5. Each lifting anchor to be "Swiftlift" or equivalent 1.3 tonne Galvanized (Conforming to AS 1214) and fitted to manufacturers specification.
6. Reinforcing placed centrally, 40 MIN end cover.
7. Reinforcement steel grade 400 to conform to AS 4671.
8. Casting to conform to AS 1830 and AS 1831.
9. Catchpits on Queensland Transport Infrastructure are subject to Queensland Transport approval.
10. RSC approved gully pit capacity charts with 10% blockage factor applies
11. All dimensions in mm.

A	ORIGINAL ISSUE	6/04	SM
	REVISIONS	DATE	APPROVED

© REDLAND SHIRE COUNCIL

DISCLAIMER. The authors shall have no liability or responsibility to the user or any other person or entity with respect to any liability, loss or damage caused or alleged to be caused, directly or indirectly, by the adoption and use of these Standard Drawings including, but not limited to, any interruption of service, loss of business or anticipatory profits, or consequential damages resulting from the use of these Standard Drawings. Persons must not rely on these Standard Drawings as the equivalent of, or a substitute for, project–specific design and assessment by an appropriately qualified professional.

Redland SHIRE COUNCIL

PRECAST GULLY INLET AND ACCESS CHAMBER COMBINATION

DRAINAGE
Standard Drawing
D–RSC–6
A

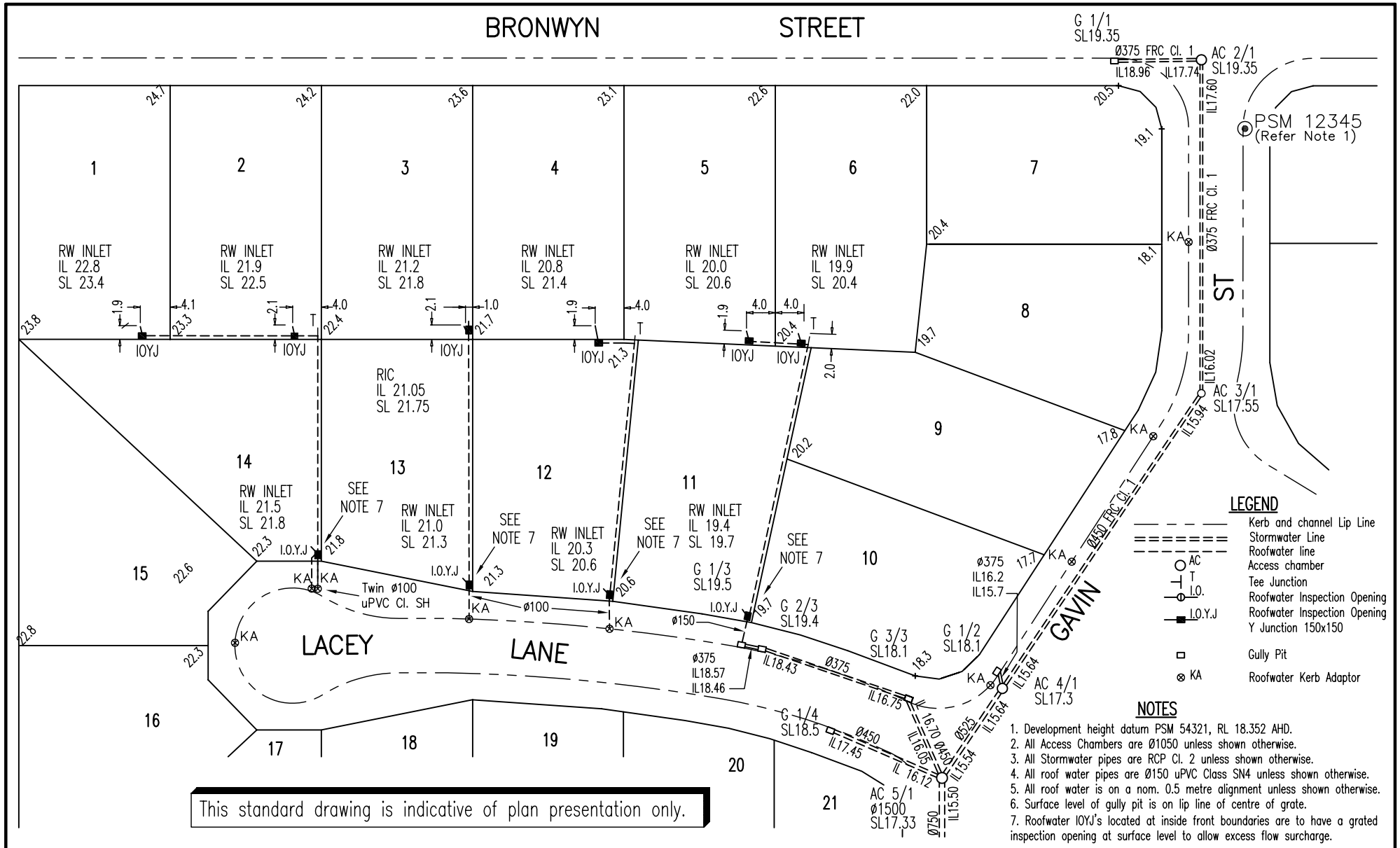

B	AMENDED	6/04	SM
A	ORIGINAL ISSUE	1/02	
	REVISIONS	DATE	APPROVED

© REDLAND SHIRE COUNCIL

DISCLAIMER. The authors shall have no liability or responsibility to the user or any other person or entity with respect to any liability, loss or damage caused or alleged to be caused, directly or indirectly, by the adoption and use of these Standard Drawings including, but not limited to, any interruption of service, loss of business or anticipatory profits, or consequential damages resulting from the use of these Standard Drawings. Persons must not rely on these Standard Drawings as the equivalent of, or a substitute for, project-specific design and assessment by an appropriately qualified professional.

Redland SHIRE COUNCIL

SAMPLE AS CONSTRUCTED PLAN
STORMWATER & ROOFWATER DRAINAGE

DRAINAGE
Standard Drawing
D-RSC-7
A | B

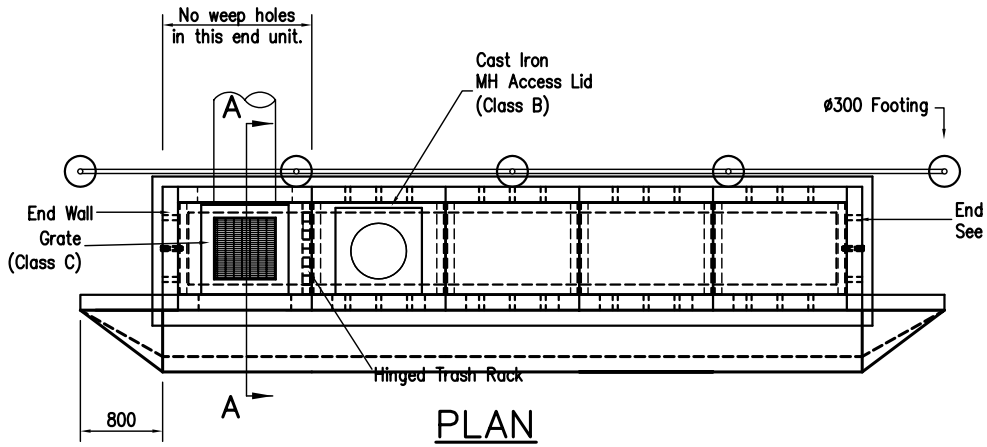

PLAN
Scale 1:50

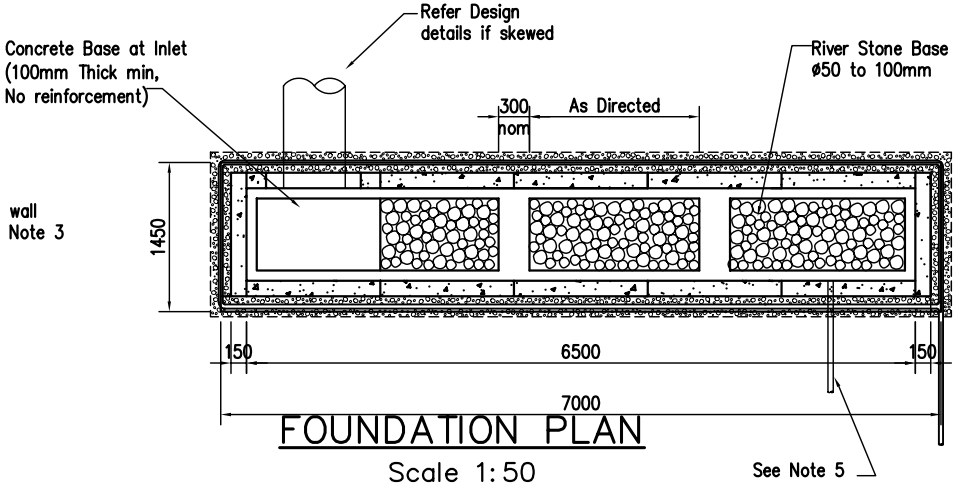

FOUNDATION PLAN
Scale 1:50

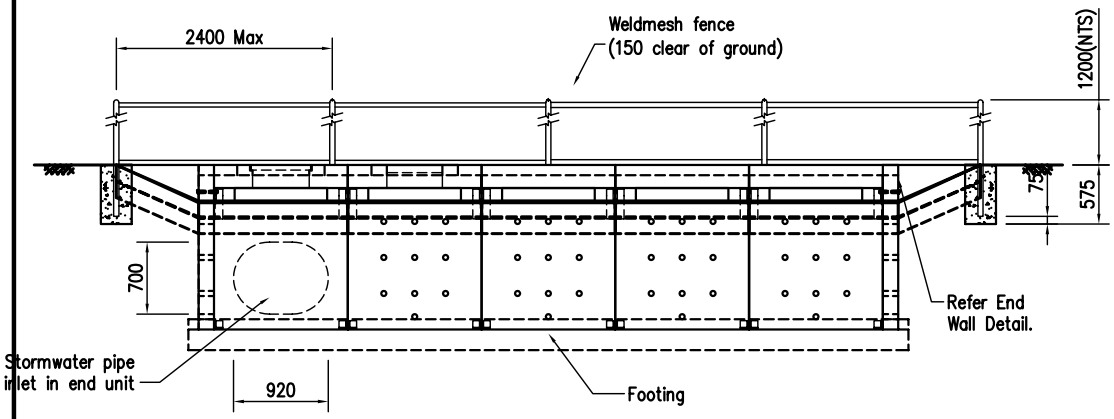

FRONT ELEVATION
Scale 1:50

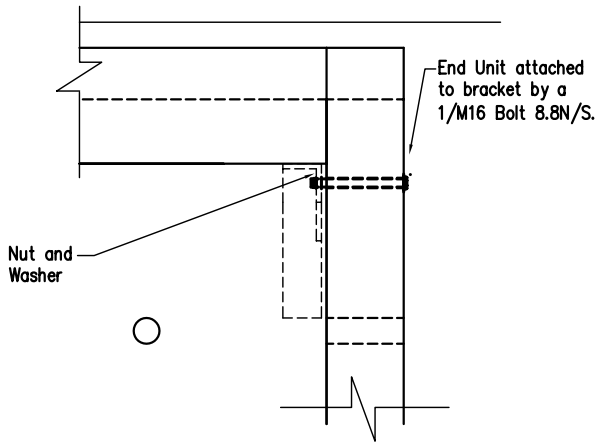

ENDWALL DETAIL
Scale 1:10

NOTES
1. Refer also standard drawings D-RSC-9 and D-RSC-10
2. Pre-cast concrete to be minimum grade N40 in accordance with AS1379 and AS3600
3. Reinforcing fabric to be in accordance with AS4671.
   All steel flats Grade 250 to AS3678
4. Both ends of assembled units to be enclosed by precast concrete end walls 150mm thick.
5. Provide 50mm dia (Nom) poly pipe outlet at approx 1% grade to outlet as directed on site

The number of units and length of the dissapator is determined by the outlet flow capacity from the units for the design storm required (usually 50% AEP) and the available width of outlet to create a wide sheet flow.

A ORIGINAL ISSUE	6/04	SJM
REVISIONS	DATE	APPROVED

© REDLAND SHIRE COUNCIL
DISCLAIMER. The authors shall have no liability or responsibility to the user or any other person or entity with respect to any liability, loss or damage caused or alleged to be caused, directly or indirectly, by the adoption and use of these Standard Drawings including, but not limited to, any interruption of service, loss of business or anticipatory profits, or consequential damages resulting from the use of these Standard Drawings. Persons must not rely on these Standard Drawings as the equivalent of, or a substitute for, project-specific design and assessment by an appropriately qualified professional.

Redland SHIRE COUNCIL

STORMWATER FLOW DISSIPATOR
TYPICAL LAYOUT DETAILS
SHEET 1 OF 3

Standard Drawing
D-RSC-8
A

NOTES

1. Refer also standard drawings D-RSC-8 and D-RSC-10
2. All steel to be hot dip galvanised.
3. All concrete to be N40, with a minimum cover of 50mm to all reinforcement.

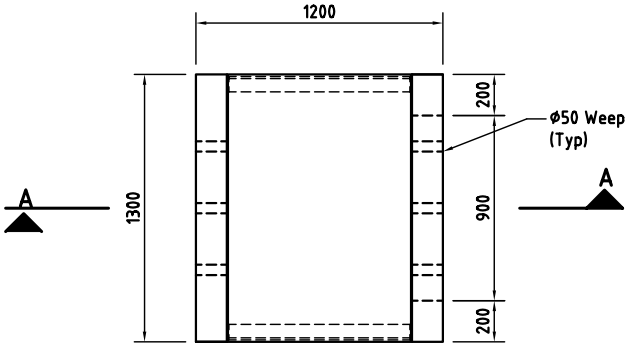

PLAN

Scale 1:25

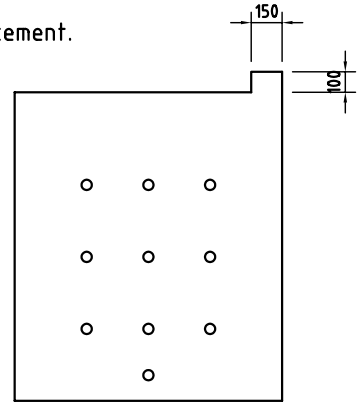

END WALL ELEVATION

Scale 1:25

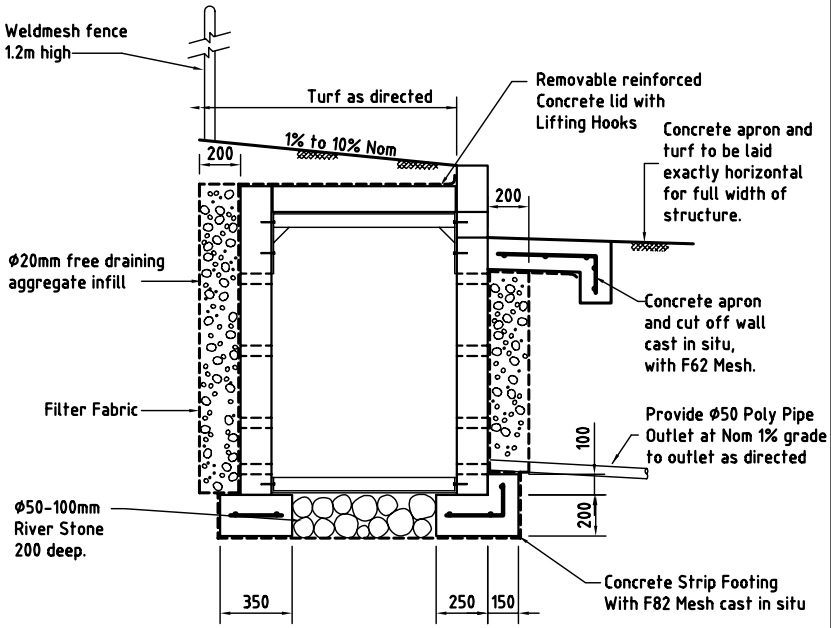

SECTION A-A

Scale 1:25

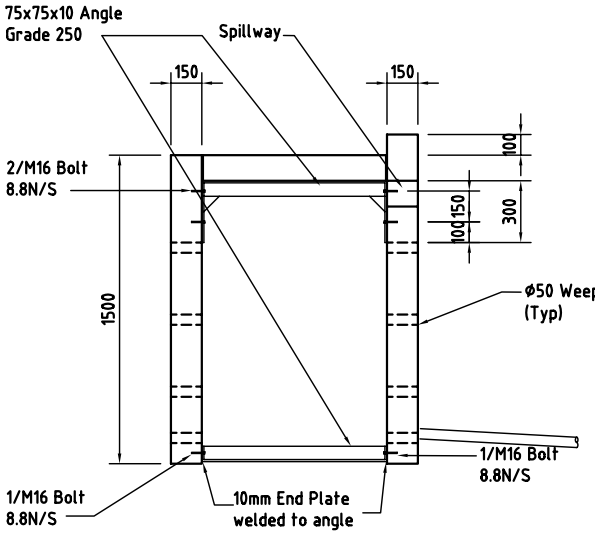

LHS ELEVATION

Scale 1:25

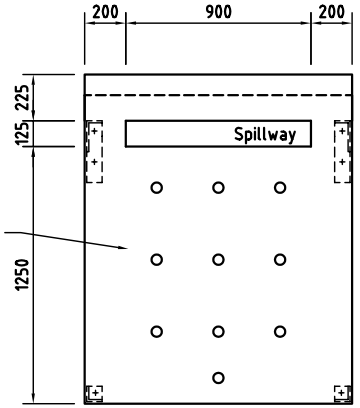

FRONT ELEVATION

Scale 1:25

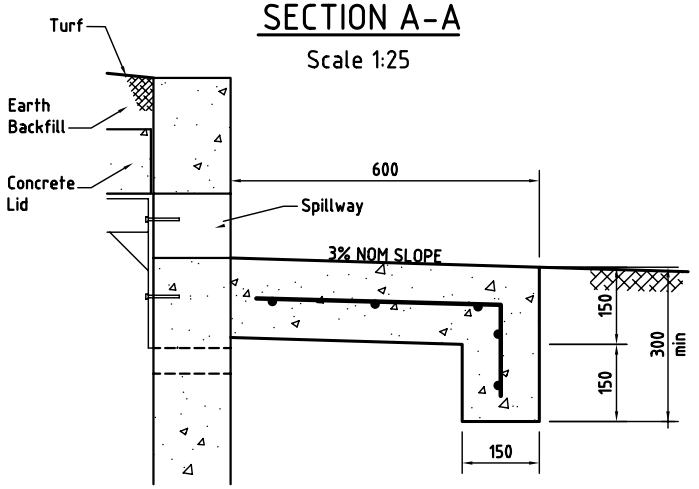

APRON DETAIL

Scale 1:25

A	ORIGNIAL ISSUE	6/04	
	REVISIONS	DATE	APPROVED

REDLAND SHIRE COUNCIL

DISCLAIMER The authors shall have no liability or responsibility to the user or any other person or entity with respect to any liability, loss or damage caused or alleged to be caused, directly or indirectly, by the adoption and use of these Standard Drawings including, but not limited to, any interruption of service, loss of business or anticipatory profits, or consequential damages resulting from the use of these Standard Drawings. Persons must not rely on these Standard Drawings as the equivalent of, or a substitute for, project-specific design and assessment by an appropriately qualified professional.

Redland SHIRE COUNCIL

STORMWATER FLOW DISSIPATOR UNIT STRUCTURE DETAILS

SHEET 2 OF 3

DRAINAGE
Standard Drawing
D-RSC-9
A

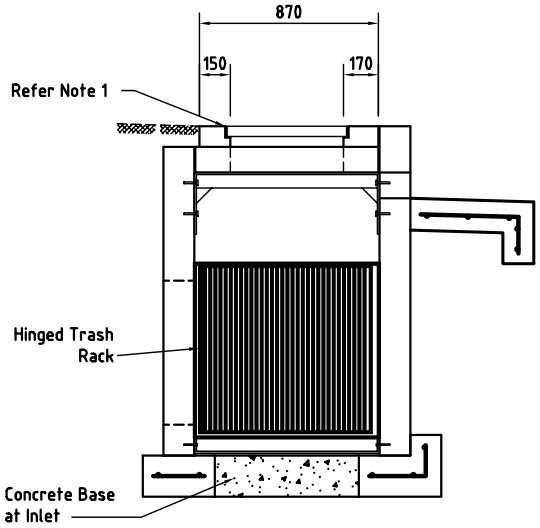

SECTION A-A

(Refer Sheet 1)

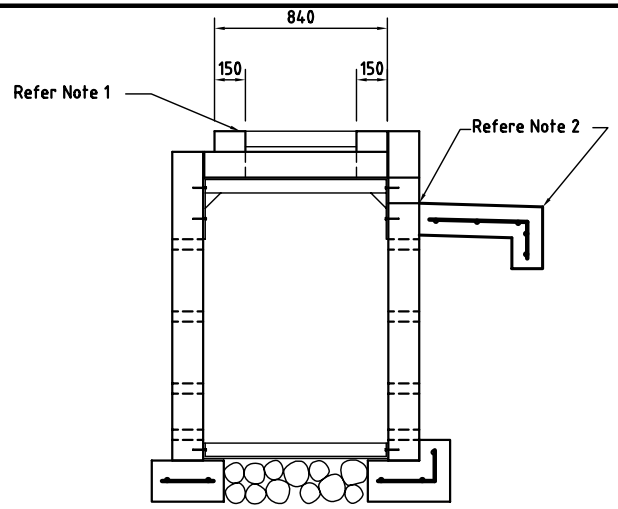

SECTION OF ACCESS UNIT

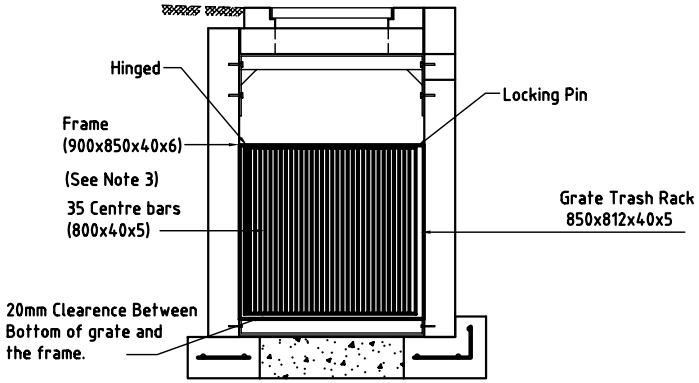

TRASH RACK DETAIL

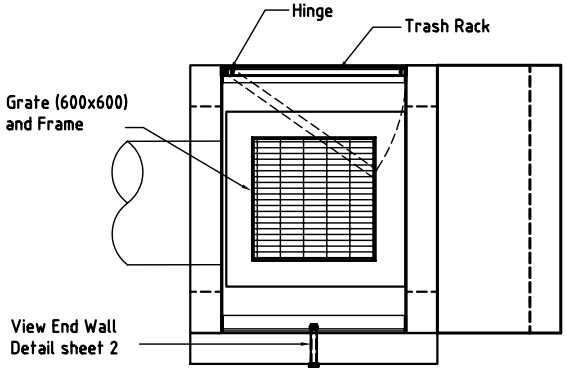

PLAN OF GRATE UNIT

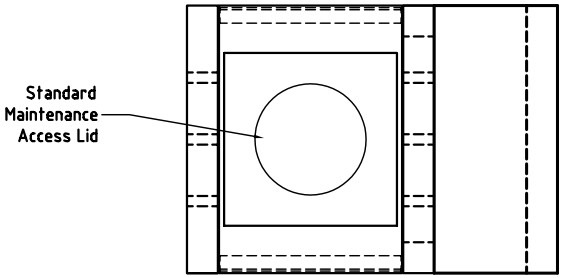

PLAN OF ACCESS UNIT

NOTES

1. Refer also standard drawings D-RSC-8 ans D-RSC-9
2. Access lid and grate to be installed at same level and grade as ground profile.
3. Lip of spillway outlet and lip of apron to be constructed exactly level for the full width of the structure.
4. The height of the trash rack may be varied to match the depth of the dissipator as required

Scale 1:25

A	ORIGNIAL ISSUE	6/04	SM
	REVISIONS	DATE	APPROVED

© REDLAND SHIRE COUNCIL

DISCLAIMER. The authors shall have no liability or responsibility to the user or any other person or entity with respect to any liability, loss or damage caused or alleged to be caused, directly or indirectly, by the adoption and use of these Standard Drawings including, but not limited to, any interruption of service, loss of business or anticipatory profits, or consequential damages resulting from the use of these Standard Drawings. Persons must not rely on these Standard Drawings as the equivalent of, or a substitute for, project-specific design and assessment by an appropriately qualified professional.

Redland SHIRE COUNCIL

STORMWATER FLOW DISSIPATOR GATE, TRASH RACK & ACCESS UNIT DETAILS

SHEET 3 OF 3

DRAINAGE
Standard Drawing
D-RSC-10
A

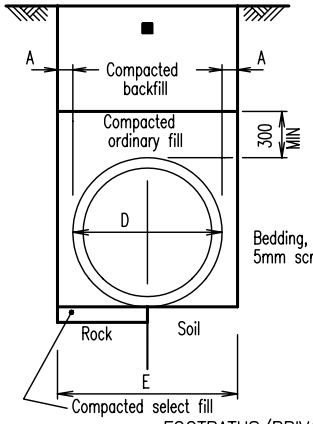

FOOTPATHS/PRIVATE PROPERTY

TYPE 1
Conforms to Support Type U AS 3725

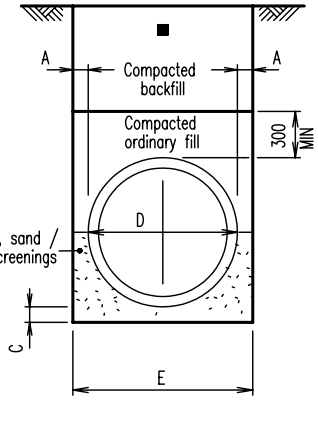

TYPE 2
Conforms to Support Type H1 AS 3725

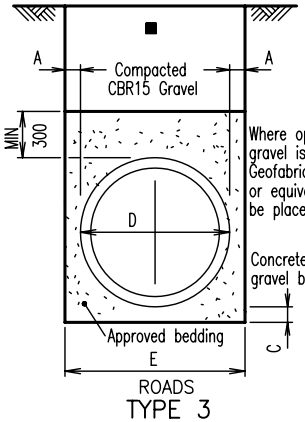

TYPE 3
SAND SURROUND

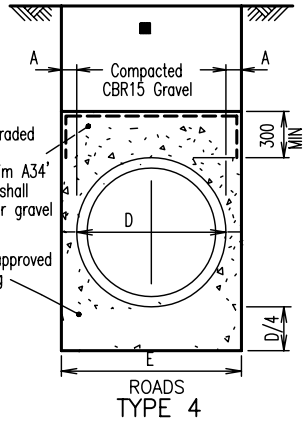

TYPE 4
CONCRETE OR GRAVEL SURROUND

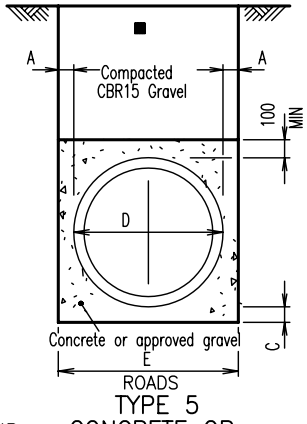

TYPE 5
CONCRETE OR GRAVEL ENCASEMENT

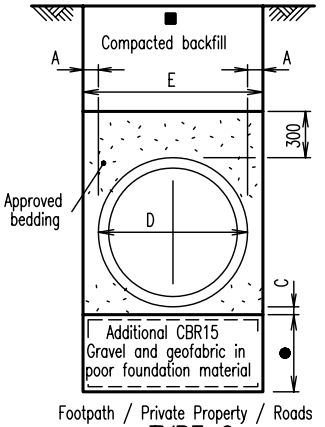

Footpath / Private Property / Roads

TYPE 6
BEDDING IN POOR GROUND

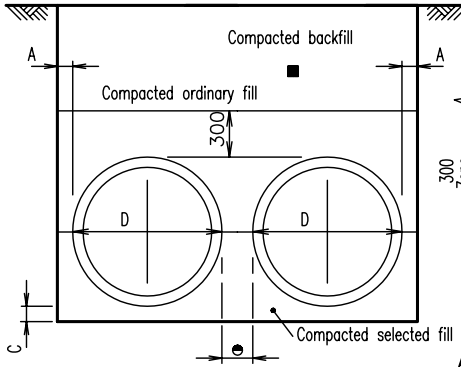

TYPE 7
BEDDING OF MULTIPLE PIPES
Conforms to Support Type H1

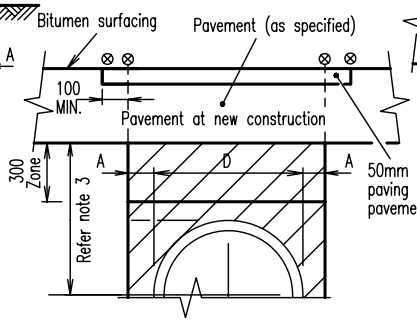

ALTERNATIVE A
AT NEW PAVEMENTS ON RESIDENTIAL STREETS & RURAL ROADS AND EXISTING SEALED PAVEMENTS

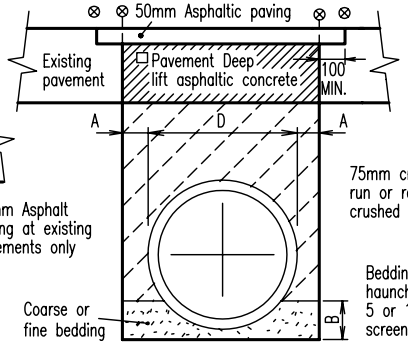

ALTERNATIVE B
AT EXISTING SURFACED PAVEMENTS ON INDUSTRIAL, TRUNK COLLECTOR, SUB–ARTERIAL & ARTERIAL STREETS / ROADS

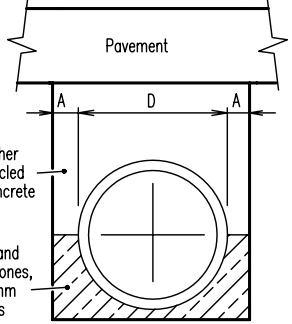

ALTERNATVE C

NOMINAL Ø culvert D(mm)	MINIMUM width A (mm)	HAUNCH depth B	Bedding depth C	Allowable width,E(m)	
				DES	MAX
300	300	36	100	1.0	1.1
375	300	45	100	1.1	1.2
450	300	53	100	1.1	1.3
525	300	61	100	1.2	1.5
600	300	69	100	1.3	1.6
750	300	85	100	1.5	1.8
900	300	103	100	1.6	1.9
1050	300	120	100	1.8	2.1
1200	300	135	100	2.0	2.2
1350	300	150	100	2.1	2.4
1500	300	169	100	2.3	2.7
1650	330	184	150	2.6	2.9
1800	360	200	150	2.8	3.1
1950	390	222	150	3.1	3.3
2100	420	239	150	3.4	3.5
2400	480	270	150	3.9	4.2
2700	540	303	150	4.3	4.6
3000	600	335	150	4.9	5.0

Bedding & Haunch material (Gravel, loam, sand or mixture) grading

AS Sieve Size	% Passing by mass	
	Type 1 – Pipes ≤ ø1200	Type 2 – Pipes > ø1350
19.0	100	98 – 100
9.5	–	35 – 50
4.75	–	5 – 10
2.36	40 – 100	0 – 2
0.425	15 – 70	0 – 1
0.075	3 – 30	0 – 1

LEGEND

- □ Pavement. Refer project documentation for detail
- ⊗ Saw cut at existing pavement
- ◓ Pipes : 300 when NOMINAL D < 600
  600 when NOMINAL D 600 – 1800
  900 when NOMINAL D > 1800
  Dimensions can be reduced to 150 MIN for non mechanical compaction of backfill
- ■ Refer Alternative A, B and C for backfill requirements at existing and new pavements.
- ● Depth to be approved by the Superintendent
- Gravel (MIN CBR15) backfill
- No fines concrete backfill (8 parts 10mm NOM size aggregate to 1 part cement).

NOTES:

1. Selected backfill in all cases shall be carried through to the wings and continued 300 thick for the length and height of wings.
2. Bedding compaction (Compacted selected fill / sand bedding)
   Cohesive material – 95% standard compaction
   Non–cohesive material – density index of 70 MIN, refer AS 1289.E5.1
   Sand – compact by flooding and use of vibrators.
3. Backfill compaction
   Compacted gravel layer under road pavement 95% standard compaction.
   Compacted CBR15 Gravel 90% standard compaction – below 300mm zone.
   Compacted backfill – at footpaths / private property 90% standard compaction.
   MAX. densities determined by standard compaction tests to AS 1289.5.1.1.
4. Refer project drawings for types and/or alternatives to be adopted.
5. Type U & Type H1 to conform to AS 3725.
6. Dimension A can be reduced to 150 MIN for non mechanical compaction of backfill
7. Pipes are to be designed to their correct strength class under all construction loads, dead loads and in–service loads.
8. All dimensions in millimetres.

A	ORIGINAL ISSUE	6/04	SM
	REVISIONS	DATE	APPROVED

© REDLAND SHIRE COUNCIL

DISCLAIMER. The authors shall have no liability or responsibility to the user or any other person or entity with respect to any liability, loss or damage caused or alleged to be caused, directly or indirectly, by the adoption and use of these Standard Drawings including, but not limited to, any interruption of service, loss of business or anticipatory profits, or consequential damages resulting from the use of these Standard Drawings. Persons must not rely on these Standard Drawings as the equivalent of, or a substitute for, project–specific design and assessment by an appropriately qualified professional.

Redland SHIRE COUNCIL

EXCAVATION, BEDDING AND BACKFILLING OF CONCRETE/ FIBRE REINFORCED DRAINAGE PIPES

DRAINAGE
Standard Drawing
D–RSC–11
A

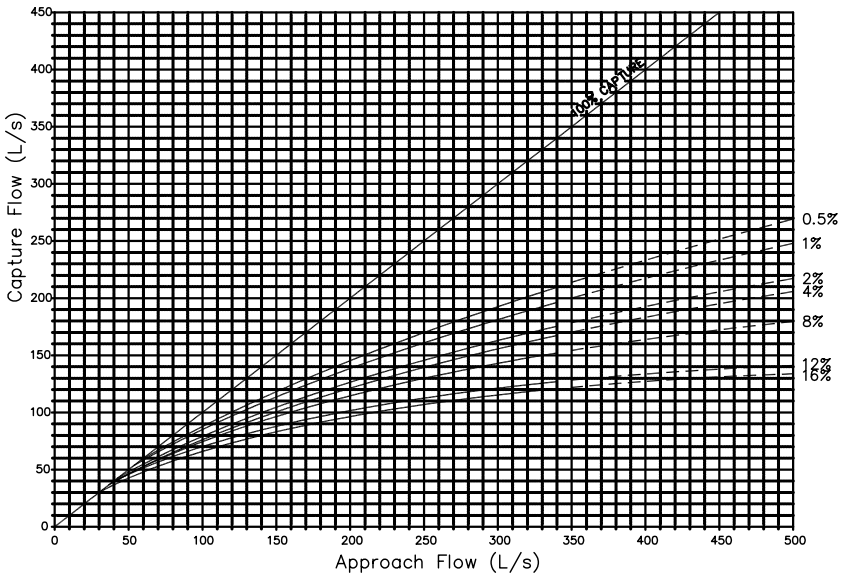

2.5% Road Crossfall

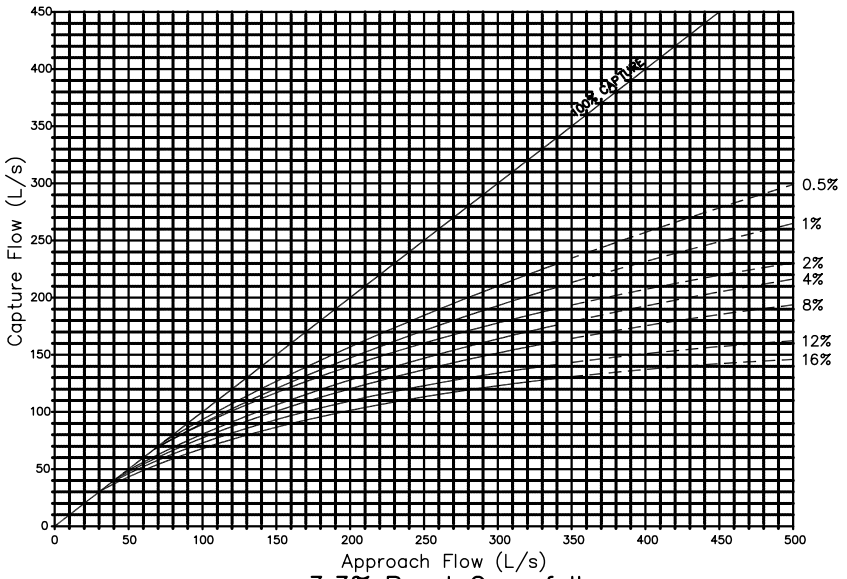

3.3% Road Crossfall

NOTES

1. CHARTS TO BE USED TO DETERMINE THE HYDRAULIC CAPTURE FOR RSC ROADWAY STORMWATER CATCHPITS. REFER STANDARD DRAWINGS D-RSC-3 AND D-RSC-6.
2. DATA BASED ON TESTING UNDERTAKEN AT URBAN WATER RESOURCE CENTRE, UNIVERSITY OF SOUTH AUSTRLALIA FOR BRISBANE CITY COUNCIL, GOLD COAST CITY COUNCIL AND QUEENSLAND DEPARTMENT OF MAIN ROADS, MARCH 2001 AND NOVEMBER 2002.

(NO EXTRAPOLATION BEYOND THE LIMITS OF THE CHARTS SHOULD BE UNDERTAKEN.)

3. CAPTURE BASED ON MAXIMUM CHAMBER WATER LEVEL 150mm BELOW CHANNEL INVERT LEVEL.
4. 10% BLOCKAGE FACTOR APPLIED TO GRATE.

LEGEND

__%. KERB AND CHANNEL LONGITUDINAL SLOPE (S)

———— BASED ON ACTUAL DATA

- - - - - EXTRAPOLATED DATA

A	ORIGINAL ISSUE	6/04	SM
	REVISIONS	DATE	APPROVED

© REDLAND SHIRE COUNCIL

DISCLAIMER. The authors shall have no liability or responsibility to the user or any other person or entity with respect to any liability, loss or damage caused or alleged to be caused, directly or indirectly, by the adoption and use of these Standard Drawings including, but not limited to, any interruption of service, loss of business or anticipatory profits, or consequential damages resulting from the use of these Standard Drawings. Persons must not rely on these Standard Drawings as the equivalent of, or a substitute for, project-specific design and assessment by an appropriately qualified professional.

Redland SHIRE COUNCIL

LIP IN LINE CATCHPITS HYDRAULIC CAPTURE CHARTS TYPE M1 KERB AND CHANNEL ON GRADE, 2400mm LINTEL

DRAINAGE
Standard Drawing
D-RSC-12
A

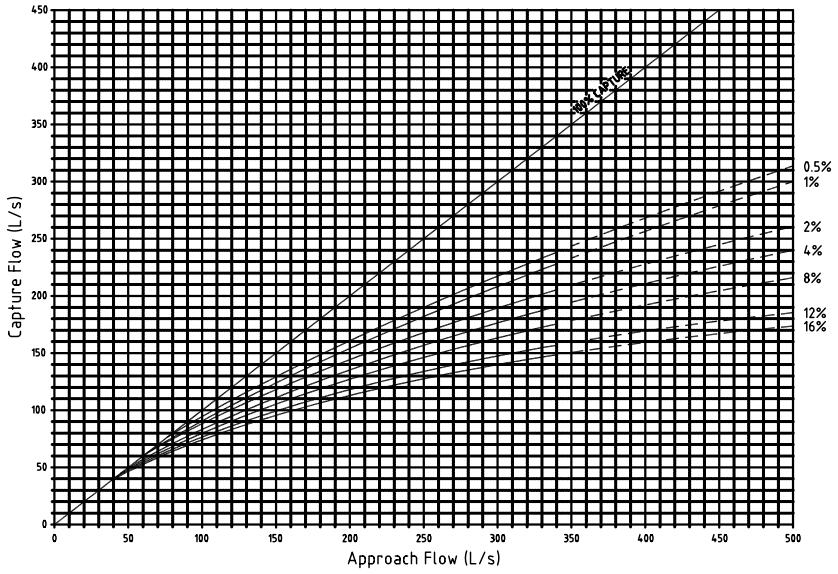

2.5% Road Crossfall

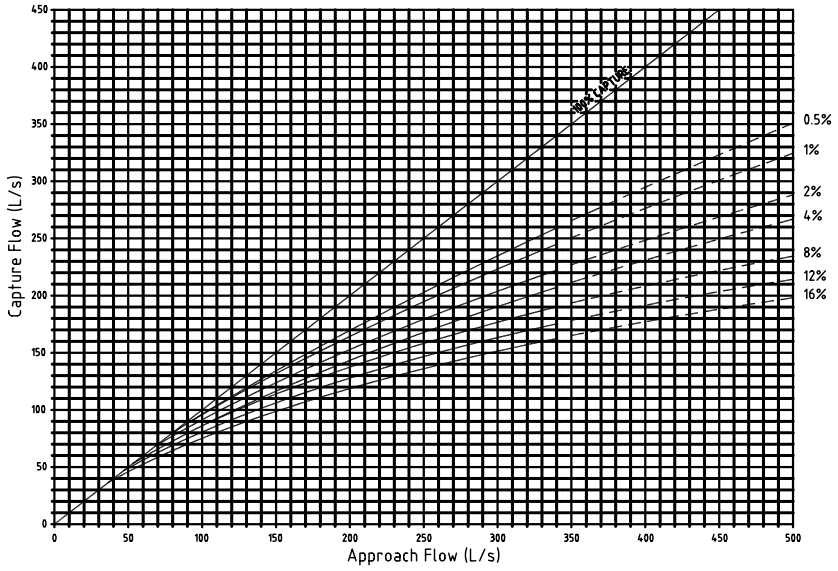

3.3% Road Crossfall

NOTES

1. CHARTS TO BE USED TO DETERMINE THE HYDRAULIC CAPTURE FOR RSC ROADWAY STORMWATER CATCHPITS. REFER STANDARD DRAWINGS D-RSC-3 AND D-RSC-6.
2. DATA BASED ON TESTING UNDERTAKEN AT URBAN WATER RESOURCE CENTRE, UNIVERSITY OF SOUTH AUSTRLALIA FOR BRISBANE CITY COUNCIL, GOLD COAST CITY COUNCIL AND QUEENSLAND DEPARTMENT OF MAIN ROADS, MARCH 2001 AND NOVEMBER 2002. (NO EXTRAPOLATION BEYOND THE LIMITS OF THE CHARTS SHOULD BE UNDERTAKEN.)
3. CAPTURE BASED ON MAXIMUM CHAMBER WATER LEVEL:
   150mm BELOW CHANNEL INVERT LEVEL FOR S_O = 0.5 TO 3%.
   350mm BELOW CHANNEL INVERT LEVEL FOR S_O > 3%
4. 10% BLOCKAGE FACTOR APPLIED TO GRATE.

LEGEND

___%. KERB AND CHANNEL LONGITUDINAL SLOPE (S_o)

———— BASED ON ACTUAL DATA

– – – – – EXTRAPOLATED DATA

A	ORIGINAL ISSUE	6/04	SM
REVISIONS		DATE	APPROVED

© REDLAND SHIRE COUNCIL

DISCLAIMER. The authors shall have no liability or responsibility to the user or any other person or entity with respect to any liability, loss or damage caused or alleged to be caused, directly or indirectly, by the adoption and use of these Standard Drawings including, but not limited to, any interruption of service, loss of business or anticipatory profits, or consequential damages resulting from the use of these Standard Drawings. Persons must not rely on these Standard Drawings as the equivalent of, or a substitute for, project-specific design and assessment by an appropriately qualified professional.

Redland SHIRE COUNCIL

LIP IN LINE CATCHPITS HYDRAULIC CAPTURE CHARTS TYPE M1 KERB AND CHANNEL ON GRADE, 3600mm LINTEL

DRAINAGE
Standard Drawing
D-RSC-13
A

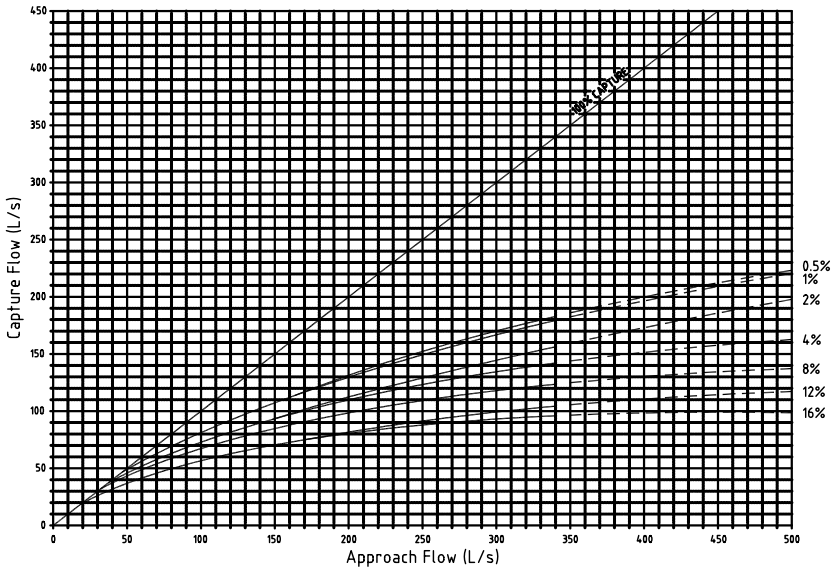

2.5% Road Crossfall

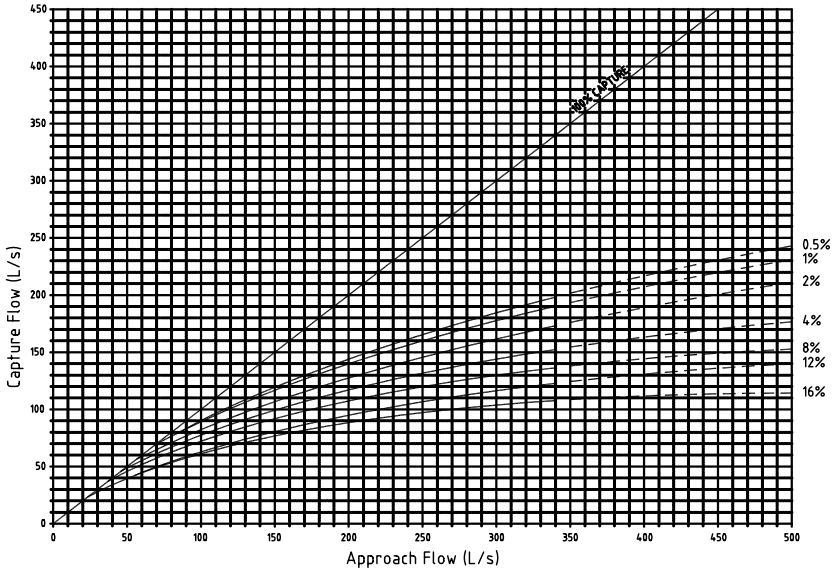

3.3% Road Crossfall

NOTES

1. CHARTS TO BE USED TO DETERMINE THE HYDRAULIC CAPTURE FOR RSC ROADWAY STORMWATER CATCHPITS. REFER STANDARD DRAWINGS D-RSC-3 AND D-RSC-6.
2. DATA BASED ON TESTING UNDERTAKEN AT URBAN WATER RESOURCE CENTRE, UNIVERSITY OF SOUTH AUSTRLALIA FOR BRISBANE CITY COUNCIL, GOLD COAST CITY COUNCIL AND QUEENSLAND DEPARTMENT OF MAIN ROADS, MARCH 2001 AND NOVEMBER 2002. (NO EXTRAPOLATION BEYOND THE LIMITS OF THE CHARTS SHOULD BE UNDERTAKEN.)
3. CAPTURE BASED ON MAXIMUM CHAMBER WATER LEVEL 150mm BELOW CHANNEL INVERT LEVEL.
4. 10% BLOCKAGE FACTOR APPLIED TO GRATE.

LEGEND

___%. KERB AND CHANNEL LONGITUDINAL SLOPE (S_o)

———— BASED ON ACTUAL DATA

– – – – – EXTRAPOLATED DATA

A	ORIGINAL ISSUE	6/04	SM
	REVISIONS	DATE	APPROVED

© REDLAND SHIRE COUNCIL

DISCLAIMER. The authors shall have no liability or responsibility to the user or any other person or entity with respect to any liability, loss or damage caused or alleged to be caused, directly or indirectly, by the adoption and use of these Standard Drawings including, but not limited to, any interruption of service, loss of business or anticipatory profits, or consequential damages resulting from the use of these Standard Drawings. Persons must not rely on these Standard Drawings as the equivalent of, or a substitute for, project-specific design and assessment by an appropriately qualified professional.

Redland SHIRE COUNCIL

LIP IN LINE CATCHPITS HYDRAULIC CAPTURE CHARTS TYPE B1 KERB AND CHANNEL ON GRADE, 2400mm LINTEL

DRAINAGE
Standard Drawing
D-RSC-14
A

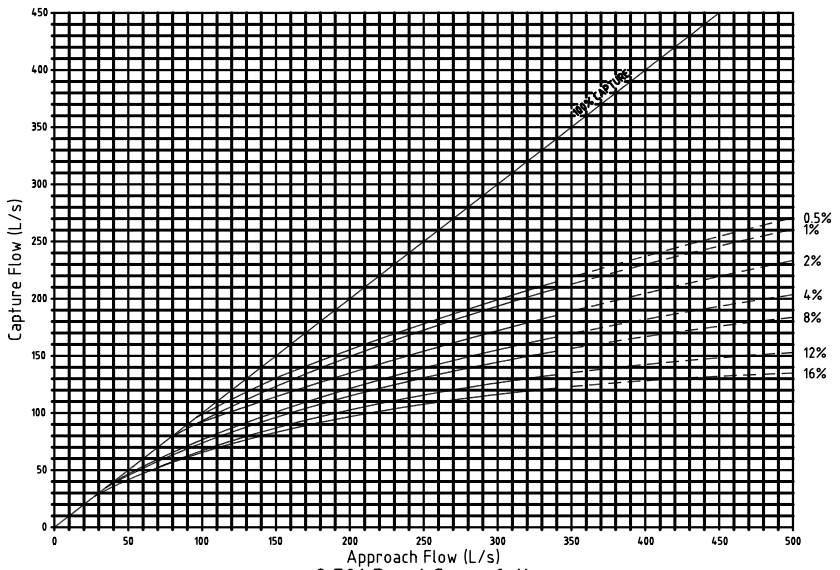

2.5% Road Crossfall

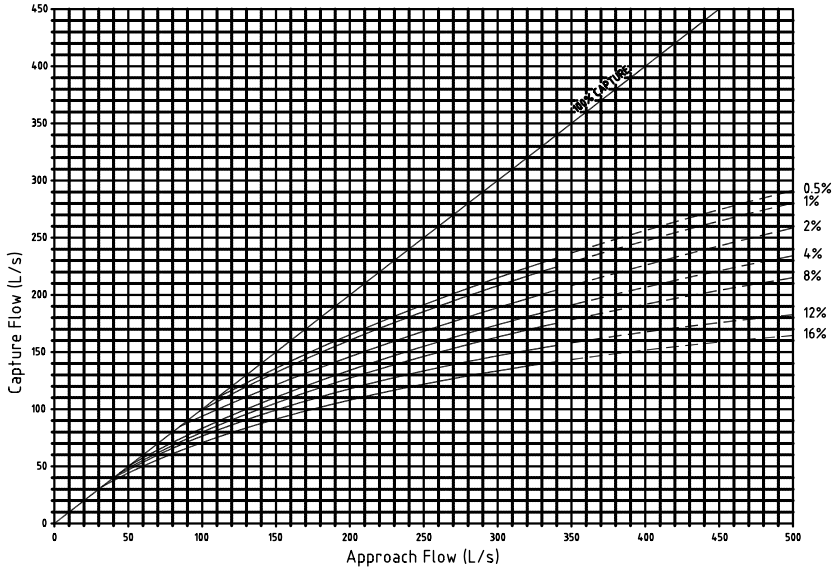

3.3% Road Crossfall

NOTES

1. CHARTS TO BE USED TO DETERMINE THE HYDRAULIC CAPTURE FOR RSC ROADWAY STORMWATER CATCHPITS. REFER STANDARD DRAWINGS D-RSC-3 AND D-RSC-6.
2. DATA BASED ON TESTING UNDERTAKEN AT URBAN WATER RESOURCE CENTRE, UNIVERSITY OF SOUTH AUSTRLALIA FOR BRISBANE CITY COUNCIL, GOLD COAST CITY COUNCIL AND QUEENSLAND DEPARTMENT OF MAIN ROADS, MARCH 2001 AND NOVEMBER 2002. (NO EXTRAPOLATION BEYOND THE LIMITS OF THE CHARTS SHOULD BE UNDERTAKEN.)
3. CAPTURE BASED ON MAXIMUM CHAMBER WATER LEVEL:
   150mm BELOW CHANNEL INVERT LEVEL FOR S_O = 0.5 TO 3%.
   350mm BELOW CHANNEL INVERT LEVEL FOR S_O > 3%
4. 10% BLOCKAGE FACTOR APPLIED TO GRATE.

LEGEND

___%. KERB AND CHANNEL LONGITUDINAL SLOPE (S_o)

———— BASED ON ACTUAL DATA

– – – – – EXTRAPOLATED DATA

A	ORIGINAL ISSUE	6/04	SM
	REVISIONS	DATE	APPROVED

© REDLAND SHIRE COUNCIL

DISCLAIMER. The authors shall have no liability or responsibility to the user or any other person or entity with respect to any liability, loss or damage caused or alleged to be caused, directly or indirectly, by the adoption and use of these Standard Drawings including, but not limited to, any interruption of service, loss of business or anticipatory profits, or consequential damages resulting from the use of these Standard Drawings. Persons must not rely on these Standard Drawings as the equivalent of, or a substitute for, project-specific design and assessment by an appropriately qualified professional.

Redland SHIRE COUNCIL

LIP IN LINE CATCHPITS HYDRAULIC CAPTURE CHARTS TYPE B1 KERB AND CHANNEL ON GRADE, 3600mm LINTEL

DRAINAGE
Standard Drawing
D-RSC-15
A

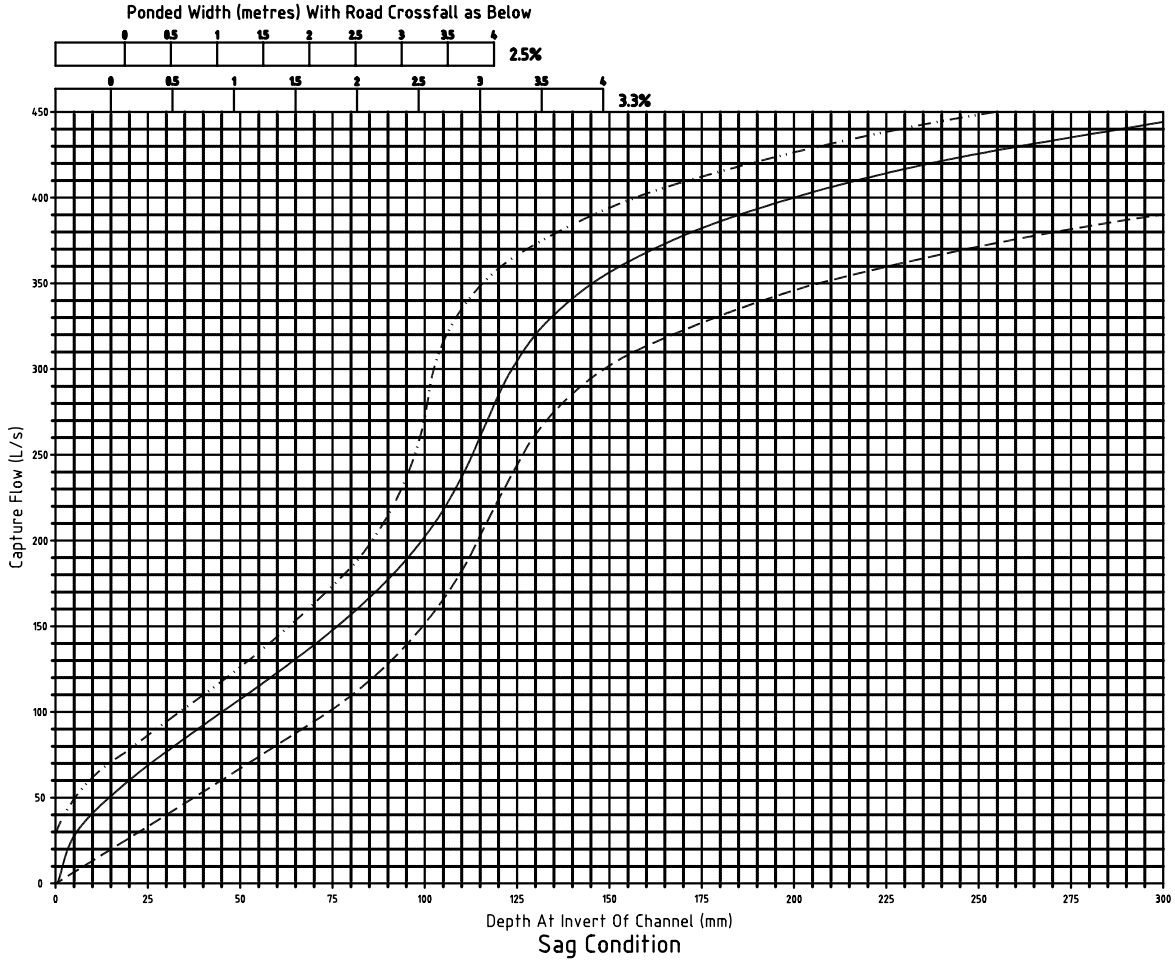

NOTES

1. CHARTS TO BE USED TO DETERMINE THE HYDRAULIC CAPTURE FOR RSC ROADWAY STORMWATER CATCHPITS. REFER STANDARD DRAWINGS D-RSC-3 AND D-RSC-6.
2. DATA BASED ON TESTING UNDERTAKEN AT URBAN WATER RESOURCE CENTRE, UNIVERSITY OF SOUTH AUSTRLALIA FOR BRISBANE CITY COUNCIL, GOLD COAST CITY COUNCIL AND QUEENSLAND DEPARTMENT OF MAIN ROADS, MARCH 2001 AND NOVEMBER 2002. (NO EXTRAPOLATION BEYOND THE LIMITS OF THE CHARTS SHOULD BE UNDERTAKEN.)
3. CAPTURE BASED ON MAXIMUM CHAMBER WATER LEVEL 150mm BELOW CHANNEL INVERT LEVEL.
4. 100% BLOCKAGE FACTOR APPLIED TO GRATE.

LEGEND

- 2400mm LINTEL
- 3600mm LINTEL
- 4800mm LINTEL

A	ORIGINAL ISSUE	6/04	SM
	REVISIONS	DATE	APPROVED

© REDLAND SHIRE COUNCIL

DISCLAIMER. The authors shall have no liability or responsibility to the user or any other person or entity with respect to any liability, loss or damage caused or alleged to be caused, directly or indirectly, by the adoption and use of these Standard Drawings including, but not limited to, any interruption of service, loss of business or anticipatory profits, or consequential damages resulting from the use of these Standard Drawings. Persons must not rely on these Standard Drawings as the equivalent of, or a substitute for, project-specific design and assessmen by an appropriately qualified professional.

Redland SHIRE COUNCIL

LIP IN LINE CATCHPITS HYDRAULIC CAPTURE CHARTS TYPE M1 KERB AND CHANNEL SAG CONDITIONS, ALL LINTELS

DRAINAGE
Standard Drawing
D-RSC-16
A

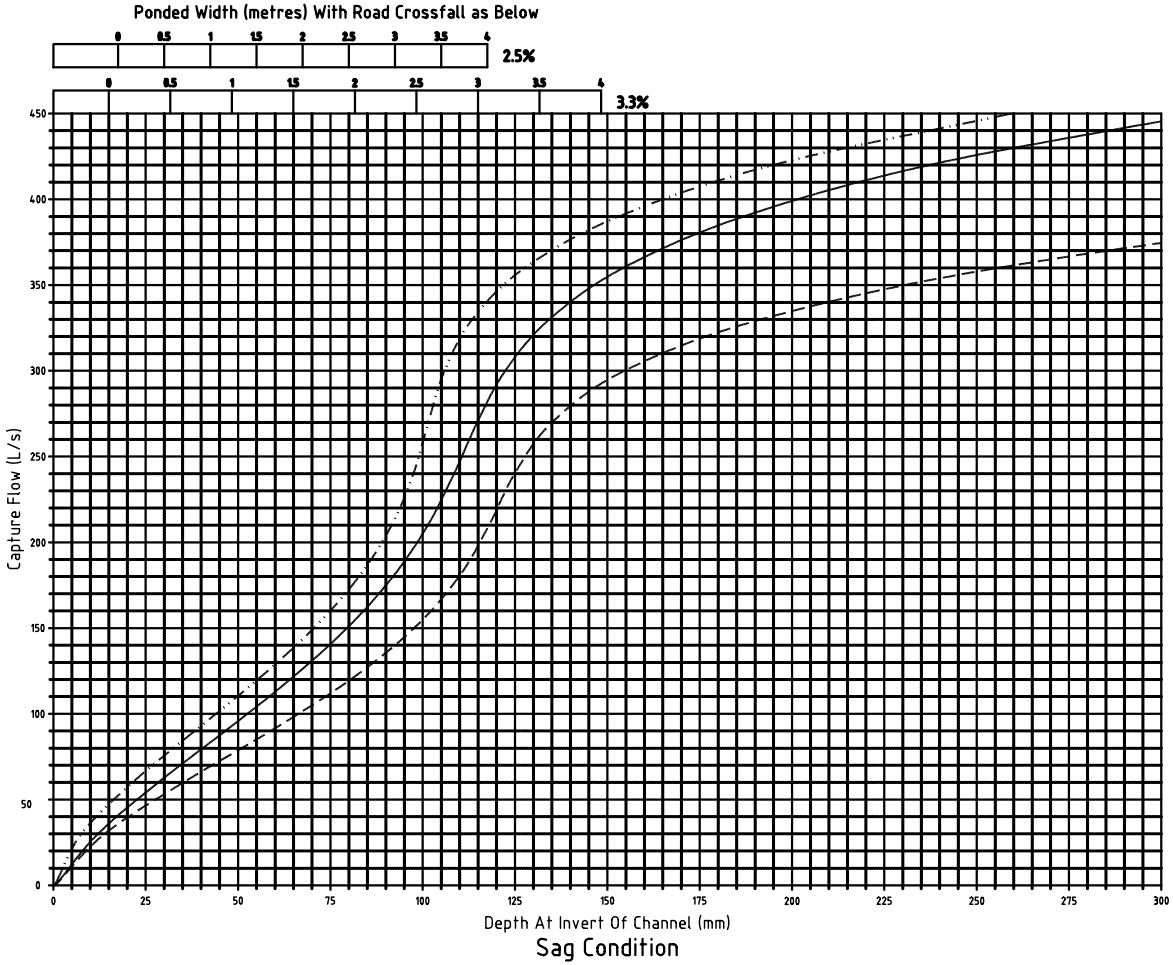

Sag Condition

NOTES

1. CHARTS TO BE USED TO DETERMINE THE HYDRAULIC CAPTURE FOR RSC ROADWAY STORMWATER CATCHPITS. REFER STANDARD DRAWINGS D-RSC-3 AND D-RSC-6.
2. DATA BASED ON TESTING UNDERTAKEN AT URBAN WATER RESOURCE CENTRE, UNIVERSITY OF SOUTH AUSTRLALIA FOR BRISBANE CITY COUNCIL, GOLD COAST CITY COUNCIL AND QUEENSLAND DEPARTMENT OF MAIN ROADS, MARCH 2001 AND NOVEMBER 2002. (NO EXTRAPOLATION BEYOND THE LIMITS OF THE CHARTS SHOULD BE UNDERTAKEN.)
3. CAPTURE BASED ON MAXIMUM CHAMBER WATER LEVEL 150mm BELOW CHANNEL INVERT LEVEL.
4. 100% BLOCKAGE FACTOR APPLIED TO GRATE.

LEGEND

- 2400mm LINTEL
- 3600mm LINTEL
- 4800mm LINTEL

A	ORIGINAL ISSUE	6/04		
	REVISIONS	DATE	APPROVED	

© REDLAND SHIRE COUNCIL

DISCLAIMER. The authors shall have no liability or responsibility to the user or any other person or entity with respect to any liability, loss or damage caused or alleged to be caused, directly or indirectly, by the adoption and use of these Standard Drawings including, but not limited to, any interruption of service, loss of business or anticipatory profits, or consequential damages resulting from the use of these Standard Drawings. Persons must not rely on these Standard Drawings as the equivalent of, or a substitute for, project-specific design and assessment by an appropriately qualified professional.

Redland SHIRE COUNCIL

LIP IN LINE CATCHPITS HYDRAULIC CAPTURE CHARTS TYPE B1 KERB AND CHANNEL SAG CONDITIONS, ALL LINTELS

DRAINAGE
Standard Drawing
D-RSC-17
A

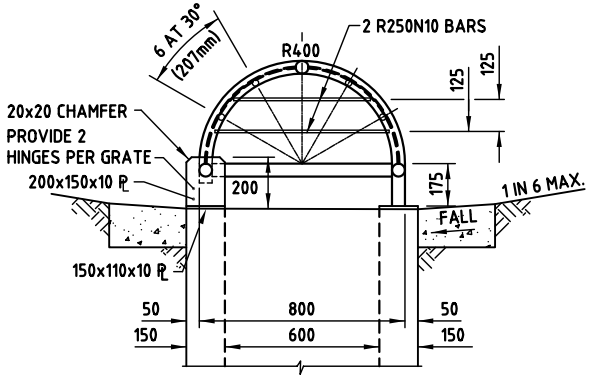

SECTION A–A

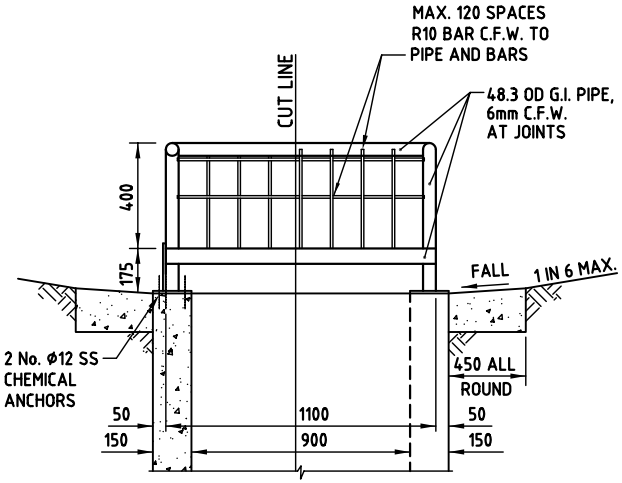

SECTION B–B

TYPE 1 – PIPE CONSTRUCTION

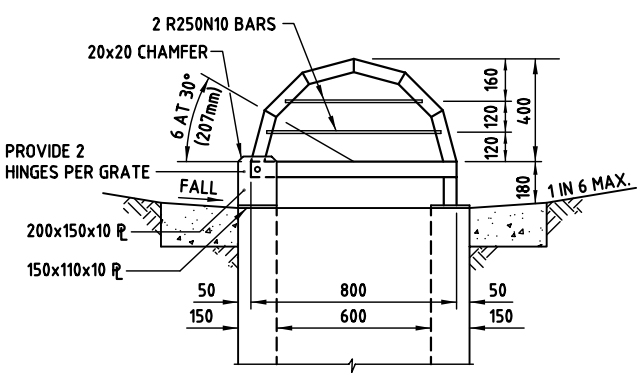

SECTION A–A

NOTES:

1. CONCRETE TO BE GRADE N25.
2. GRATE AND HINGES TO BE HOT DIPPED GALVANISED TO AS/NZS 4680 AFTER FABRICATION.
3. THE ISOMETRIC VIEW IS SIMILAR IN TYPE 1 AND TYPE 2.
4. PIPE INVERT LEVELS AS PER DRAINAGE DETAILS.
5. DIMENSIONS ARE IN MILLIMETRES UNLESS SHOWN OTHERWISE.
6. LOCATION OF DOME TYPE COVER TO BE APPROVED BY LOCAL GOVERNMENT

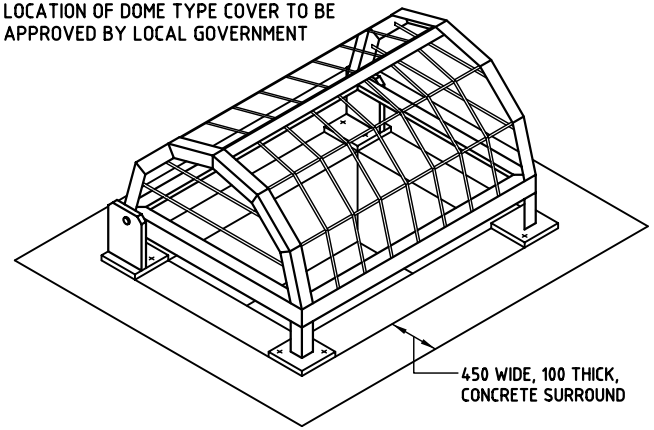

ISOMETRIC VIEW

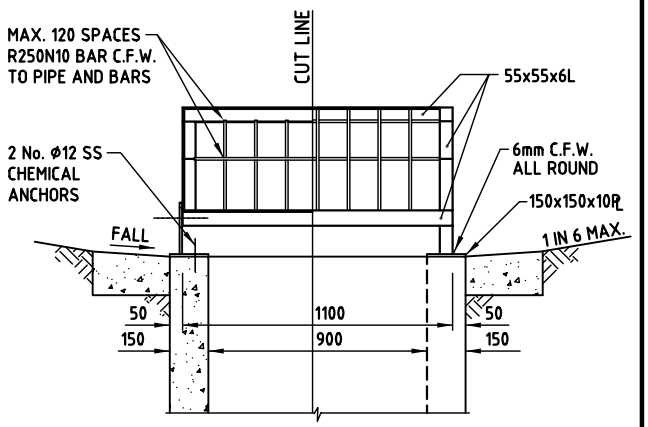

SECTION B–B

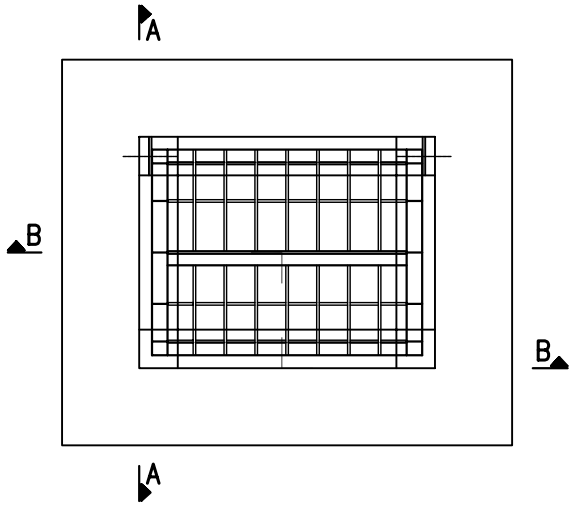

PLAN

TYPE 2 – ANGLE CONSTRUCTION

A	ORIGINAL ISSUE	02/05	
REVISIONS		DATE	APPROVED

© REDLAND SHIRE COUNCIL

DISCLAIMER. The authors shall have no liability or responsibility to the user or any other person or entity with respect to any liability, loss or damage caused or alleged to be caused, directly or indirectly, by the adoption and use of these Standard Drawings including, but not limited to, any interruption of service, loss of business or anticipatory profits, or consequential damages resulting from the use of these Standard Drawings. Persons must not rely on these Standard Drawings as the equivalent of, or a substitute for, project-specific design and assessment by an appropriately qualified professional.

Redland SHIRE COUNCIL

FIELD INLET PIT
DOME TYPE COVER
(NON PEDESTRIAN AREAS)

DRAINAGE
Standard Drawing
D–RSC–18
A

REDLAND SHIRE COUNCIL APPROVED STANDARD DRAWINGS

STD. DWG. No.	DESCRIPTIONS
	IPWEAQ DRAWINGS
W-0010	AIR VALVE PIT – ø50 AND ø80 AIR VALVES
W-0030	BACKFLOW PREVENTION DEVICE SLAB AND POLE MOUNTED CUBICLE
W-0061	C.I. HYDRANT AND VALVE BOXES
	REDLAND SHIRE COUNCIL DRAWINGS
W-RSC-2	SAMPLE AS-CONSTRUCTED PLAN – WATER RETICULATION
W-RSC-3	WATER CONNECTIONS, SINGLE, DOUBLE AND GHOST ABOVE GROUND METER
W-RSC-4	WATER CONNECTIONS, SUBDIVISIONAL
W-RSC-5	TYPICAL WATER RETICULATION LAYOUT AT CUL-DE-SAC
	WATER SERVICES ASSOCIATION OF AUSTRALIA DRAWINGS (WSAA)
WAT-1102	TYPICAL MAINS CONSTRUCTION – RETICULATION MAIN ARRANGEMENTS
WAT-1103	TYPICAL MAINS CONSTRUCTION – DISTRIBUTION AND TRANSFER MAINS
WAT-1105	TYPICAL MAINS CONSTRUCTION – CONNECTION TO EXISTING MAINS
	EMBEDMENT / TRENCHFILL AND RESTRAINTS
WAT-1200	SOIL CLASSIFICATION GUIDELINES AND ALLOWABLE BEARING PRESSURES FOR ANCHORS AND THRUST BLOCKS
WAT-1201	EMBEDMENT AND TRENCHFILL – TYPICAL ARRANGEMENT
WAT-1202	STANDARD EMBEDMENT – ALL PIPE TYPES
WAT-1203	SPECIAL EMBEDMENTS – INADEQUATE AND POOR FOUNDATION
WAT-1204	SPECIAL EMBEDMENTS – CONCRETE GEOTEXTILE AND CEMENT STABILISED SYSTEMS
WAT-1205	THRUST BLOCK DETAILS – CONCRETE BLOCKS
WAT-1207	THRUST AND ANCHOR BLOCKS – GATE VALVES AND VERTICAL BENDS
WAT-1208	RESTRAINED JOINT SYSTEM – DN100 TO DN375 DI MAINS
WAT-1209	TRENCH DRAINAGE – BULKHEADS & TRENCHSTOP
WAT-1210	TRENCH DRAINAGE – TYPICAL SYSTEMS
WAT-1211	BURIED CROSSINGS – UNDER OBSTRUCTIONS
WAT-1212	BURIED CROSSINGS – MAJOR ROADWAYS
WAT-1213	BURIED CROSSINGS – RAILWAYS
WAT-1214	BURIED CROSSINGS – BORED & JACKED ENCASING PIPE DETAILS
	INSTALLATION PRACTICES / STRUCTURES
WAT-1300	VALVE AND HYDRANT IDENTIFICATION – IDENTIFICATION MARKERS & MARKER POSTS
WAT-1301	TYPICAL VALVE & HYDRANT INSTALLATION – VALVE ARRANGEMENT
WAT-1302	TYPICAL VALVE & HYDRANT INSTALLATION – HYDRANTS AND AIR RELIEF VALVES
WAT-1303	TYPICAL SURFACE FITTING INSTALLATION – GATE VALVE SURFACE BOXES – NON TRAFFICABLE
WAT-1304	TYPICAL SURFACE FITTING INSTALLATION – GATE VALVE SURFACE BOXES – TRAFFICABLE
WAT-1305	TYPICAL SURFACE FITTING INSTALLATION – HYDRANT SURFACE BOXES – TRAFFICABLE AND NON-TRAFFICABLE
WAT-1306	TYPICAL SURFACE FITTING INSTALLATION – HYDRANT SURFACE BOXES – TRAFFICABLE
WAT-1307	TYPICAL APPURTENANCE INSTALLATION – SCOUR ARRANGEMENTS
WAT-1308	TYPICAL APPURTENANCE INSTALLATION – VALVE CHAMBERS
WAT-1309	TYPICAL APPURTENANCE INSTALLATION – PRESSURE REDUCING VALVES (PRV)
WAT-1310	TYPICAL ABOVE GROUND INSTALLATIONS – AQUEDUCT
WAT-1311	AERIAL CROSSINGS – AQUEDUCT PROTECTION GRILLE
WAT-1312	AERIAL CROSSINGS – BRIDGE CROSSING CONCEPTS
WAT-1313	FLANGED JOINTS – BOLTING DETAILS

STD. DWG. No.	DESCRIPTIONS
	FABRICATION DETAILS
WAT-1400	STEEL PIPE JOINTING – BUTT WELDING OF JOINTS
WAT-1401	STEEL PIPE JOINTING – RUBBER RING JOINT SPIGOT BANDS
WAT-1402	TYPICAL STEEL PIPE JOINTING – WELDED PIPE COLLARS
WAT-1403	TYPICAL STEEL FABRICATION – BENDS
WAT-1404	TYPICAL STEEL FABRICATION – ACCESS OPENING FOR PIPES ≥ DN750
WAT-1405	TYPICAL STEEL FABRICATION – DISMANTLING AND FLEXIBLE JOINTS
WAT-1406	TYPICAL STEEL FABRICATION – VALVE CONNECTION & BYPASS
WAT-1407	DI INSTALLATION – VALVE BYPASS ARRANGEMENT FOR DI AND GRP PIPE
WAT-1408	EXTERNAL CORROSION PROTECTION – CEMENT LINED STEEL – FOR DN 300 TO DN 1200

	REVISIONS	DATE	APPROVED
D	AMENDED	6/02	
C	AMENDED	1/02	
B	AMENDED	1/99	
A	ORIGINAL ISSUE	1/98	

© REDLAND SHIRE COUNCIL

DISCLAIMER. The authors shall have no liability or responsibility to the user or any other person or entity with respect to any liability, loss or damage caused or alleged to be caused, directly or indirectly, by the adoption and use of these Standard Drawings including, but not limited to, any interruption of service, loss of business or anticipatory profits, or consequential damages resulting from the use of these Standard Drawings. Persons must not rely on these Standard Drawings as the equivalent of, or a substitute for, project-specific design and assessment by an appropriately qualified professional.

Redland SHIRE COUNCIL

INDEX
STANDARD DRAWINGS
WATER

WATER
Standard Drawing
W-RSC-1

A | B | C | D

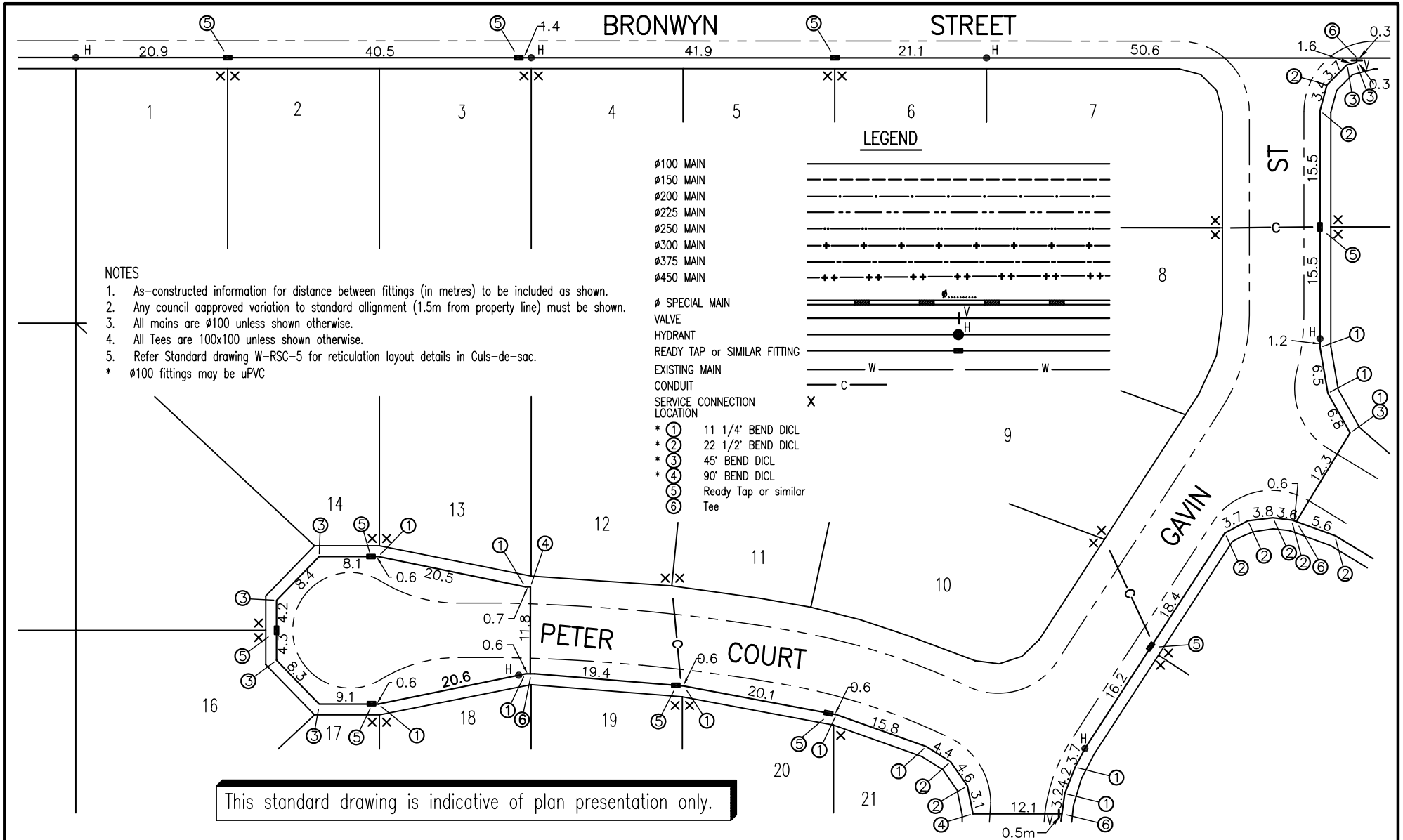

C	AMENDED	6/04	
B	AMENDED	1/99	
A	ORIGINAL ISSUE	1/98	
REVISIONS		DATE	APPROVED

© REDLAND SHIRE COUNCIL

DISCLAIMER. The authors shall have no liability or responsibility to the user or any other person or entity with respect to any liability, loss or damage caused or alleged to be caused, directly or indirectly, by the adoption and use of these Standard Drawings including, but not limited to, any interruption of service, loss of business or anticipatory profits, or consequential damages resulting from the use of these Standard Drawings. Persons must not rely on these Standard Drawings as the equivalent of, or a substitute for, project-specific design and assessment by an appropriately qualified professional.

Redland SHIRE COUNCIL

SAMPLE AS CONSTRUCTED PLAN WATER RETICULATION

WATER
Standard Drawing
W-RSC-2

A | B | C

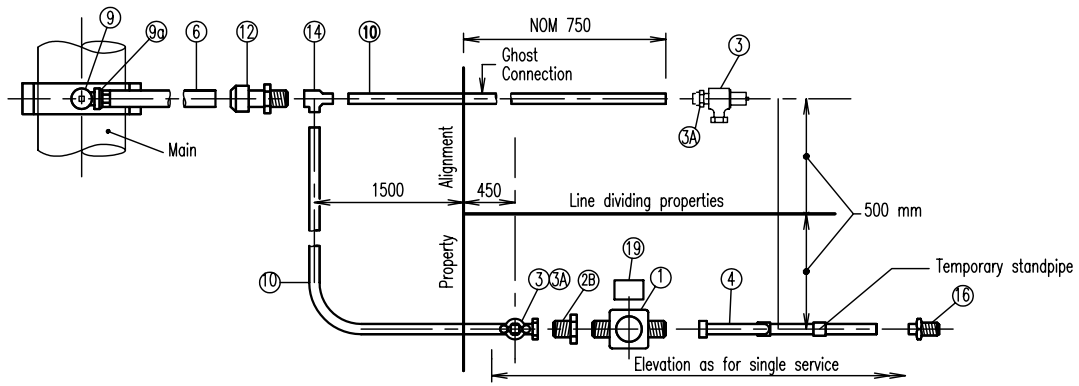

NEW NOM Ø20 SERVICE PLUS GHOST CONNECTION – PLAN

LONG SIDE CONNECTION

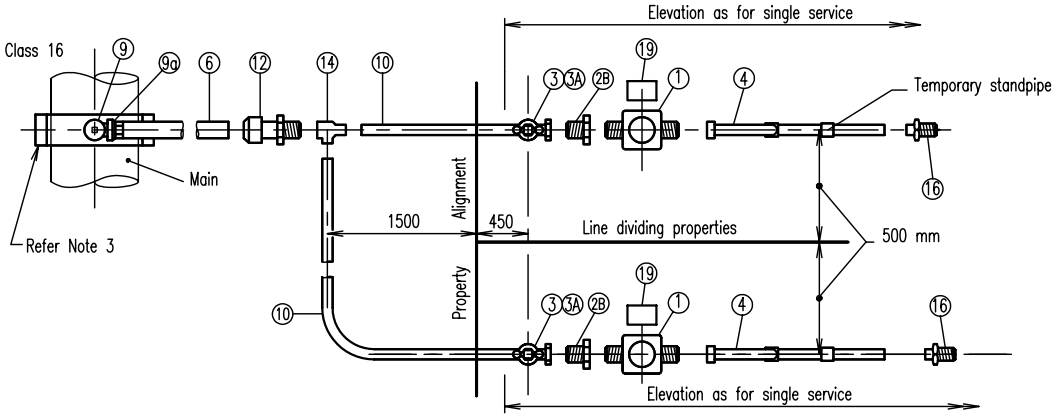

NEW NOM Ø20 DOUBLE SERVICE – PLAN

LONG SIDE CONNECTION

MARK NO	DESCRIPTION
1.	20mm Water Meter. Dimensions to AS 3565 Fig 1.1
2B.	Meter tail piece with 20mm BSP supplied with Water Meter (Pre drilled to suite wire seal)
3.	20mm male MI to 20mm OD capillary adaptor
3A.	Rt. angled 20mm lockable F & F ball valve
4.	20mm 90° gunmetal bend
6.	32 OD Polythene Type PE80B Class 16
9.	25mm x 32mm OD poly TPNFPR bonnet poly ferrule stop cock.
9a.	GM38 or Similar (Brass), 32 FI x 32 OD (Poly)
10.	20mm OD Type A annealed copper tube
12.	32mm OD poly x 20 MI BSP connector
14.	20mm FI to 20mm OD x 20mm OD capillary tee.
16.	20mm SP x 15 MI BSP PVC adaptor (Note – provided with thread to suit tap)
19.	75mm x 50mm x 900mm Hardwood Post, white in Colour.

NOTES

1. Copper tubing and connectors
   (a) All copper tubing shall be in accordance with AS 1432.
   (b) All capillary and compression fittings shall be in accordance with AS 3688.
   (c) All capillary fittings shall have long engagement sockets.
2. Polythene pipe and connectors
   (a) All polythene pipe shall be MDPE Type PE80B Class 16 in accordance with AS 4130
   (b) All mechanical joint fittings shall be in accordance with AS 1460.
3. New mains are to have Readytap or similar connections. Existing mains are to have tapping bands.
4. Ghost connections shall be laid flat and buried.
5. All dimensions in millimetres.

REVISIONS		DATE	APPROVED
D	AMENDED	1/02	
C	AMENDED	6/99	
B	AMENDED	1/99	
A	ORIGINAL ISSUE	1/98	

© REDLAND SHIRE COUNCIL

DISCLAIMER. The authors shall have no liability or responsibility to the user or any other person or entity with respect to any liability, loss or damage caused or alleged to be caused, directly or indirectly, by the adoption and use of these Standard Drawings including, but not limited to, any interruption of service, loss of business or anticipatory profits, or consequential damages resulting from the use of these Standard Drawings. Persons must not rely on these Standard Drawings as the equivalent of, or a substitute for, project-specific design and assessment by an appropriately qualified professional.

Redland SHIRE COUNCIL

WATER CONNECTIONS SINGLE, DOUBLE AND GHOST ABOVE GROUND METER

WATER
Standard Drawing
W–RSC–3
A | B | C | D

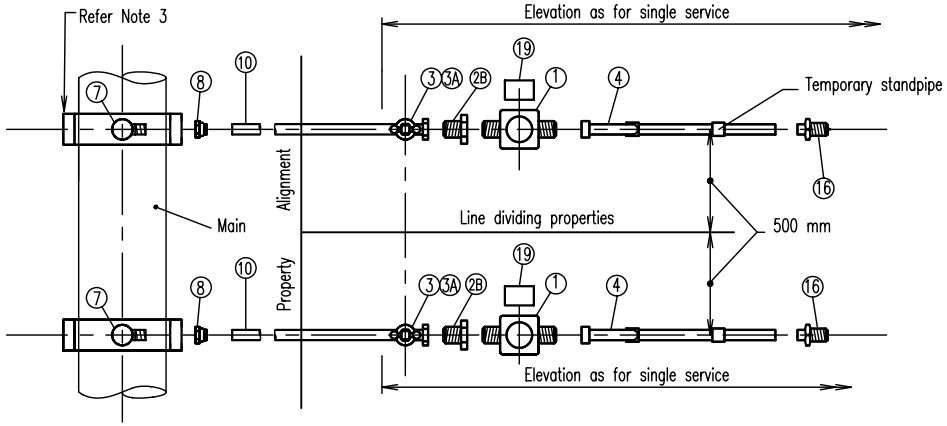

NEW NOM Ø20 DOUBLE SERVICE – PLAN

SHORT SIDE CONNECTION

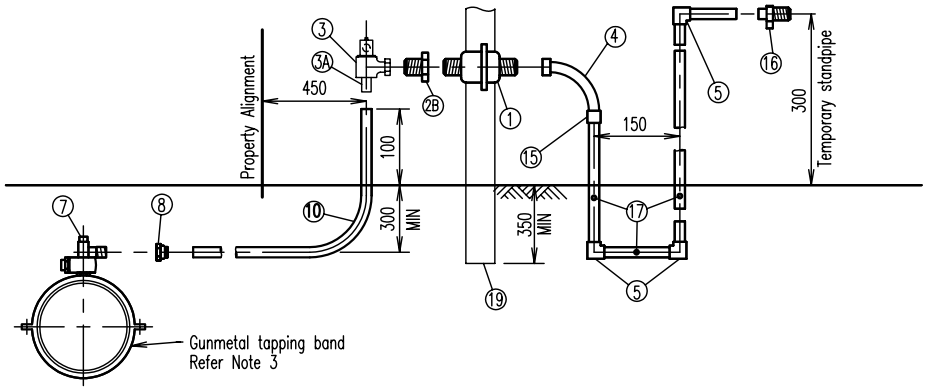

NEW NOM Ø20 SINGLE SERVICE – ELEVATION

SHORT SIDE CONNECTION

MARK NO	DESCRIPTION
1.	20mm Water Meter. Dimensions to AS 3565 Fig 1.1
2B.	As above ecept pre-drilled to suite wire seal.
3.	20mm male MI to 20mm OD capillary adaptor
3A.	Rt. angled 20mm lockable F&F ball valve
4.	20mm 90° gunmetal bend
5.	20mm 90° uPVC elbow solvent cement joint.
7.	20mm TPNFR ferrule stop cock
8.	20mm ferrule capillary adaptor.
10.	20mm OD Type A annealed copper tube
15.	25mm Cat. 18 Female iron connector
16.	20mm SP x 15 MI BSP PVC adaptor (Note – provide with thread to suite tap)
17.	20mm uPVC pipe or annealed copper tubing.
18.	Straight through 19mm DR brass ball valve (20mm male x 25mm male)
18A.	32 OD Polythene Type PE 80B class 16
19.	75mm x 50mm x 900mm Hardwood Post, White in Colour.

NOTES

1. Copper tubing and connectors
   (a) All copper tubing shall be in accordance with AS 1432.
   (b) All capillary and compression fittings shall be in accordance with AS 3688.
   (c) All capillary fittings shall have long engagement sockets.
2. Polythene pipe and connectors
   (a) All polythene pipe shall be MDPE Type PE80B Class 16 in accordance with AS 4130.
   (b) All mechanical joint fittings shall be in accordance with AS 1460.
3. New mains are to have Readytap or similar connections. Existing mains are to have tapping bands.
4. Ghost connections shall be laid flat and buried.
5. All dimensions in millimetres.

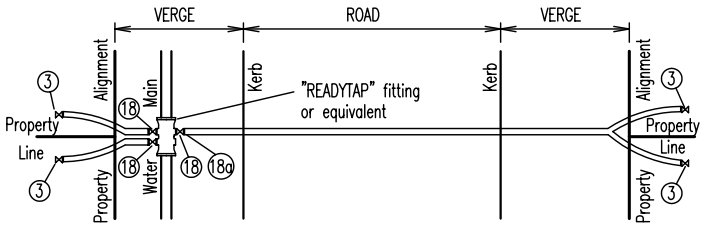

OPTIONAL FITTING

NTS

REVISIONS	DATE	APPROVED
D AMENDED	1/02	
C AMENDED	6/99	
B AMENDED	1/99	
A ORIGINAL ISSUE	1/98	

© REDLAND SHIRE COUNCIL

DISCLAIMER. The authors shall have no liability or responsibility to the user or any other person or entity with respect to any liability, loss or damage caused or alleged to be caused, directly or indirectly, by the adoption and use of these Standard Drawings including, but not limited to, any interruption of service, loss of business or anticipatory profits, or consequential damages resulting from the use of these Standard Drawings. Persons must not rely on these Standard Drawings as the equivalent of, or a substitute for, project-specific design and assessment by an appropriately qualified professional.

Redland SHIRE COUNCIL

WATER CONNECTIONS SUBDIVISIONAL

WATER
Standard Drawing
W–RSC–4

A | B | C | D

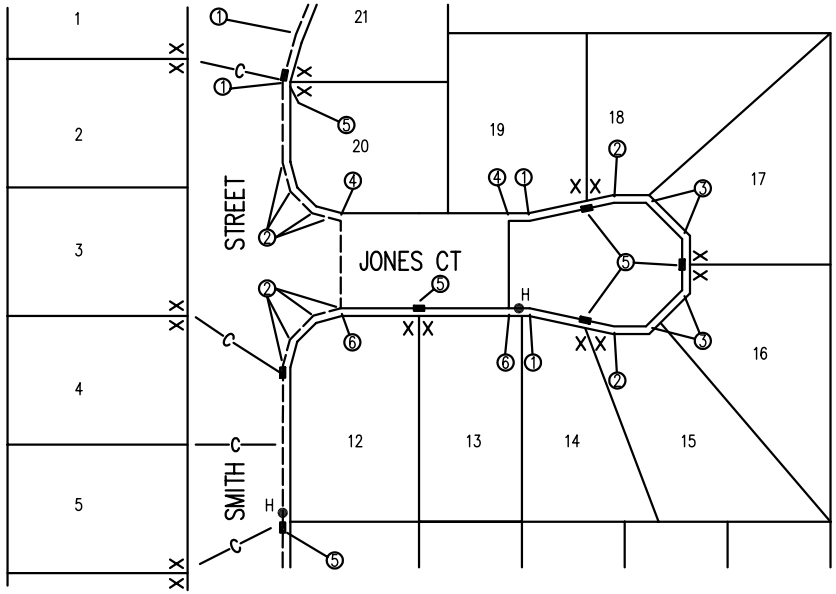

TYPICAL RETICULATION PLAN WHEN SERVICING MORE THAN 5 LOTS

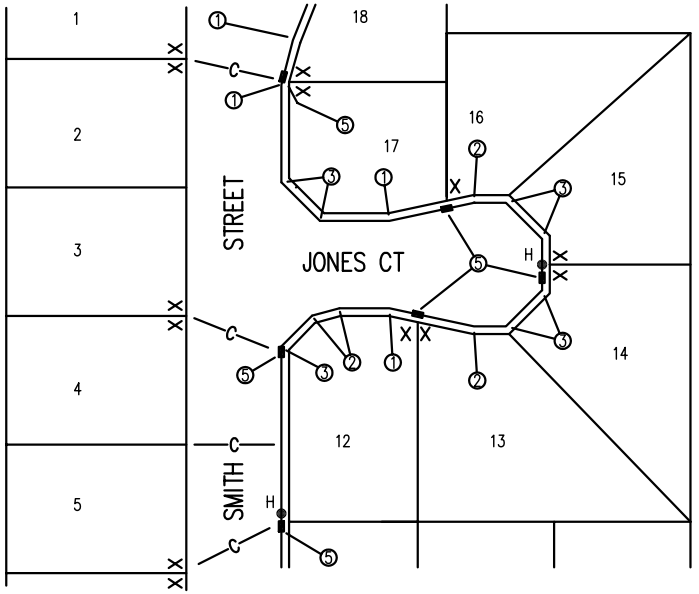

TYPICAL RETICULATION PLAN WHEN SERVICING 5 LOTS OR LESS

LEGEND

- ø100 MAIN
- ø150 MAIN
- ø200 MAIN
- ø225 MAIN
- ø250 MAIN
- ø300 MAIN
- ø375 MAIN
- ø450 MAIN
- ø SPECIAL MAIN
- VALVE (V)
- HYDRANT (H)
- READYTAP OR SIMILAR FITTING
- EXISTING MAIN (W)
- CONDUIT (C)
- SERVICE CONNECTION LOCATION (X)

1. 11 1/4° BEND DICL
2. 22 1/2° BEND DICL
3. 45° BEND DICL
4. 90° BEND DICL
5. Readytap or Similar Fitting
6. Tee

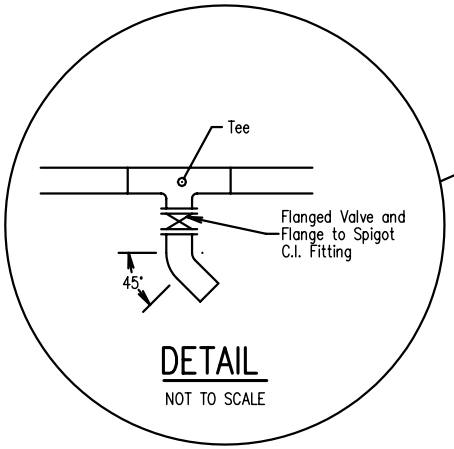

DETAIL

NOT TO SCALE

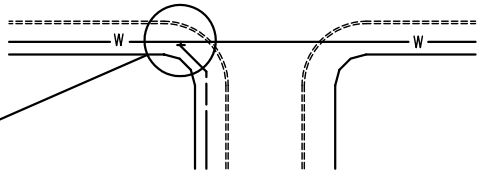

TYPICAL INTERSECTION DETAIL

NOT TO SCALE

NOTES

1. Any Council approved variation to standard alignment (1.5m from property line) must be shown.

D	AMENDED	6/04	
C	AMENDED	1/02	
B	AMENDED	1/99	
A	ORIGINAL ISSUE	1/98	
REVISIONS		DATE	APPROVED

© REDLAND SHIRE COUNCIL

DISCLAIMER. The authors shall have no liability or responsibility to the user or any other person or entity with respect to any liability, loss or damage caused or alleged to be caused, directly or indirectly, by the adoption and use of these Standard Drawings including, but not limited to, any interruption of service, loss of business or anticipatory profits, or consequential damages resulting from the use of these Standard Drawings. Persons must not rely on these Standard Drawings as the equivalent of, or a substitute for, project-specific design and assessment by an appropriately qualified professional.

Redland SHIRE COUNCIL

TYPICAL WATER RETICULATION LAYOUT AT CUL-DE-SAC

WATER
Standard Drawing
W-RSC-5
A B C D

REDLAND SHIRE COUNCIL APPROVED STANDARD DRAWINGS

STD. DWG. No.	DESCRIPTIONS
	IPWEAQ DRAWINGS
	ACCESS CHAMBERS (MAINTENANCE HOLES)
	ACCESS CHAMBERS
S-0020	1050mm NOM DIA – INSITU CONSTRUCTION
S-0022	1500mm NOM DIA – INSITU CONSTRUCTION
S-0024	RECTANGULAR, INCLUDING CAST IRON COVER AND FRAME
S-0025	CAST IRON COVER AND FRAME, CAST IRON CONCRETE FILLED COVER
S-0026	CAST IRON COVER AND FRAME, BOLT DOWN
S-0030	HOUSE CONNECTION BRANCHES
	PRESSURE MAINS
S-0070	PRESSURE MAIN DISCHARGE DETAILS
	PUMP STATIONS
	SUBMERSIBLE SEWAGE PUMPING STATION
S-0050	GENERAL ARRANGEMENT, 2000mm DIA.
S-0051	7.2m VENT POLE TERRAIN CAT 2 AND 3
S-0052	12.0m VENT POLE TERRAIN CAT 2 AND 3
S-0054	2000mm DIA, REINFORCEMENT, PRESSURE GAUGE ARRANGEMENT AIR RELEASE PIPEWORK DETAILS
S-0055	FABRICATED METALWORK SHEET 1
S-0056	FABRICATED METALWORK SHEET 2
S-0057	LIFT STATION SUBMERSIBLE, 1800mm DIA (0–20L/sec)
S-0058	PUMP STATION OVERFLOW
	SUBMERSIBLE SEWAGE PUMPING STATION
S-0059	GENERAL ARRANGEMENT, REINFORCEMENT, 2400mm DIA.
S-0060	ALUMINIUM COVERS AND FRAMES, 2400mm DIA.
	REDLAND SHIRE COUNCIL DRAWINGS
	AS CONSTRUCTED
S-RSC-2	SAMPLE AS CONSTRUCTED PLAN – SEWERAGE RETICULATION
	WATER SERVICES ASSOCIATION OF AUSTRALIA DRAWINGS (WSAA)
	PIPELINE LAYOUT
SEW-1101	DESIGN LAYOUTS – LONGITUDINAL SECTIONS
SEW-1102	DESIGN LAYOUTS – CONNECTION TO EXISTING SEWER SCHEDULE OF WORKS
* SEW-1103	PIPELAYING – TYPICAL ARRANGEMENTS
	EMBEDMENT / TRENCHFILL AND SUPPORT SYSTEMS
SEW-1200	SOIL CLASSIFICATION GUIDELINES AND ALLOWABLE BEARING PRESSURES FOR BULKHEADS
SEW-1201	EMBEDMENT AND TRENCHFILL – TYPICAL ARRANGEMENT
SEW-1202	STANDARD EMBEDMENT – FLEXIBLE AND RIGID PIPES
SEW-1203	SPECIAL EMBEDMENT – INADEQUATE FOUNDATIONS REQUIRING OVER EXCAVATION & REPLACEMENT
SEW-1204	SPECIAL EMBEDMENT – SUPPORT UTILISING PILES
SEW-1205	SPECIAL EMBEDMENT – CONCRETE & STABILISED SUPPORTS
SEW-1206	TRENCH DRAINAGE – BULKHEADS AND TRENCHSTOP
SEW-1207	TRENCH DRAINAGE – TYPICAL SYSTEMS
	ACCESS STRUCTURES
SEW-1300	MAINTENANCE HOLES FOR SEWERS ≤ DN 300 – PRECAST TYPES P1 & P2
SEW-1301	MAINTENANCE HOLES FOR SEWERS ≤ DN 300 – CAST INSITU TYPES C1 & C2
SEW-1302	STANDARD MAINTENANCE HOLES – PIPE CONECTION DETAILS
SEW-1303	MAINTENANCE HOLES FOR SEWERS ≤ DN 300 – CHANGES IN LEVEL DETAILS
SEW-1304	MAINTENANCE HOLES FOR SEWERS ≤ DN 300 – TYPICAL CHANNEL ARRANGEMENTS
SEW-1305	MAINTENANCE HOLES – TYPICAL CHANNEL DETAILS
SEW-1306	MAINTENANCE HOLES – ALTERNATIVE DROP CONNECTIONS
SEW-1307	MAINTENANCE HOLES – STEP IRONS & LADDERS
SEW-1308	MAINTENANCE HOLES – TYPICAL MH COVER ARRANGEMENT
SEW-1309	MAINTENANCE HOLES – SEWERS DN 375 TO DN 750
SEW-1311	MAINTENANCE HOLES – DEPTH TO INVERT 6m TO 15m
SEW-1312	MAINTENANCE HOLES – DEPTH TO INVERT > 15m
SEW-1313	MAINTENANCE HOLE – CONNECTION DETAILS FOR DN 110 TO DN 450 PE PIPE
SEW-1314	MAINTENANCE SHAFTS – TYPICAL INSTALLATION
SEW-1315	MAINTENANCE SHAFTS – MS & VARIABLE BEND INSTALLATIONS
SEW-1316	MAINTENANCE SHAFTS – TMS AND CONNECTION INSTALLATIONS
SEW-1317	MAINTENANCE SHAFTS – TYPICAL MS COVER ARRANGEMENTS
	SPECIAL CROSSINGS / STRUCTURES ARRANAGMENTS
SEW-1400	BURIED CROSSINGS – SYPHON ARRANGEMENT
SEW-1401	BURIED CROSSINGS – RAILWAYS
SEW-1402	BURIED CROSSINGS – MAJOR ROADWAYS
SEW-1403	BURIED CROSSINGS – BORED AND JACKED ENCASING PIPE DETAILS
SEW-1404	AERIAL CROSSINGS – AQUEDUCT
SEW-1405	AERIAL CROSSINGS – AQUEDUCT PROTECTION GRILLE
SEW-1406	AERIAL CROSSINGS – BRIDGE CROSSING CONCEPTS
SEW-1407	VENTING SYSTEM – INDUCT VENT
SEW-1408	VENTING SYSTEM – EDUCT VENT
SEW-1409	WATER SEAL ARRANGEMENTS – MAINS TYPE
SEW-1410	WATER SEAL ARRANGEMENTS – MAINTENANCE HOLE SYSTEM
SEW-1411	WATER SEAL ARRANGEMENTS – TWIN MAINTENANCE HOLE SYSTEM
SEW-1412	EMERGENCY RELIEF STRUCTURES – TYPICAL ARRANGEMENT DN 150 TO DN 375
	CONNECTIONS TO EXISTING SYSTEMS
SEW-1500	INSERTION AND REPAIR SYSTEMS – CUT-IN METHODS
SEW-1501	INSERTION AND REPAIR SYSTEMS – INSERTION OF JUNCTIONS
SEW-1502	INSERTION AND REPAIR SYSTEMS – MAINTENACE STRUCTURES

* USE THIS STANDARD ONLY WITH THE PRIOR APPROVAL OF THE GENERAL MANAGER OF REDLAND WATER AND WASTE

C	AMENDED	1/04	
B	AMENDED	6/02	
A	ORIGINAL ISSUE	1/02	
REVISIONS		DATE	APPROVED

© REDLAND SHIRE COUNCIL

DISCLAIMER. The authors shall have no liability or responsibility to the user or any other person or entity with respect to any liability, loss or damage caused or alleged to be caused, directly or indirectly, by the adoption and use of these Standard Drawings including, but not limited to, any interruption of service, loss of business or anticipatory profits, or consequential damages resulting from the use of these Standard Drawings. Persons must not rely on these Standard Drawings as the equivalent of, or a substitute for, project-specific design and assessment by an appropriately qualified professional.

Redland SHIRE COUNCIL

INDEX STANDARD DRAWINGS SEWERAGE

SEWERAGE
Standard Drawing
S-RSC-1

A B C

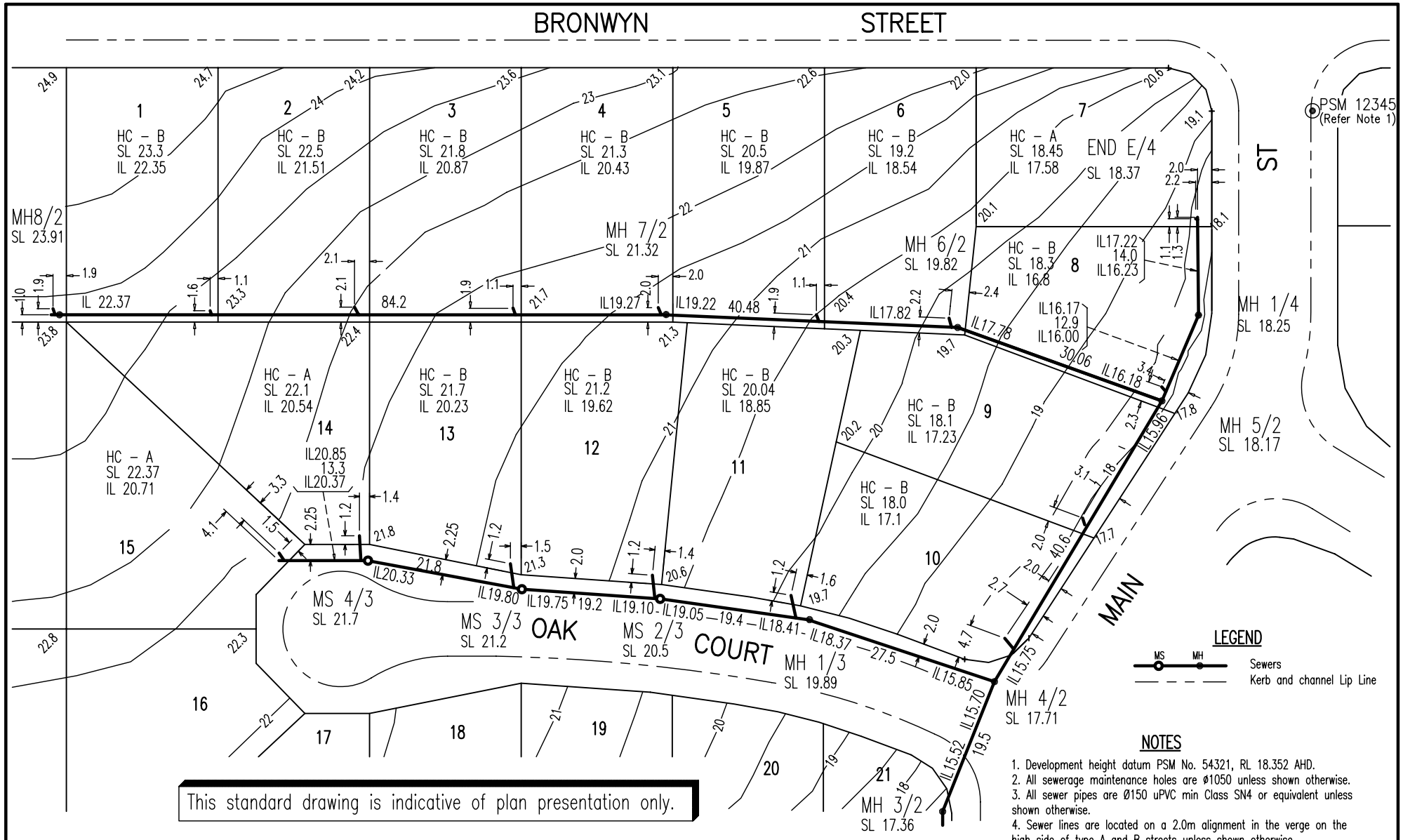

This standard drawing is indicative of plan presentation only.

NOTES

1. Development height datum PSM No. 54321, RL 18.352 AHD.
2. All sewerage maintenance holes are Ø1050 unless shown otherwise.
3. All sewer pipes are Ø150 uPVC min Class SN4 or equivalent unless shown otherwise.
4. Sewer lines are located on a 2.0m alignment in the verge on the high side of type A and B streets unless shown otherwise.

B	AMENDED	6/04	
A	ORIGINAL ISSUE	1/02	
REVISIONS		DATE	APPROVED

© REDLAND SHIRE COUNCIL

DISCLAIMER. The authors shall have no liability or responsibility to the user or any other person or entity with respect to any liability, loss or damage caused or alleged to be caused, directly or indirectly, by the adoption and use of these Standard Drawings including, but not limited to, any interruption of service, loss of business or anticipatory profits, or consequential damages resulting from the use of these Standard Drawings. Persons must not rely on these Standard Drawings as the equivalent of, or a substitute for, project-specific design and assessment by an appropriately qualified professional.

Redland SHIRE COUNCIL

SAMPLE AS CONSTRUCTED PLAN SEWERAGE RETICULATION

SEWERAGE
Standard Drawing
S-RSC-2

A | B

Std. Dwg. No.	Descriptions
	Redland Shire Council Approved Standard Drawings
	Redland Shire Council Drawings
P-RSC-2	Bikepath Pavement Joints
P-RSC-3	Signs – Park Name Sign
P-RSC-4	Bikepath Slowdown Control Reverse Curve
P-RSC-5	Bikepath Slowdown Control Offset Chicane

REVISIONS		DATE	APPROVED
B	ORIGINAL ISSUE	1/02	
A	ORIGINAL ISSUE	1/98	

© REDLAND SHIRE COUNCIL

DISCLAIMER. The authors shall have no liability or responsibility to the user or any other person or entity with respect to any liability, loss or damage caused or alleged to be caused, directly or indirectly, by the adoption and use of these Standard Drawings including, but not limited to, any interruption of service, loss of business or anticipatory profits, or consequential damages resulting from the use of these Standard Drawings. Persons must not rely on these Standard Drawings as the equivalent of, or a substitute for, project-specific design and assessment by an appropriately qualified professional.

Redland SHIRE COUNCIL

INDEX
STANDARD DRAWINGS
PARKS

PARKS
Standard Drawing
P-RSC-1

A | B

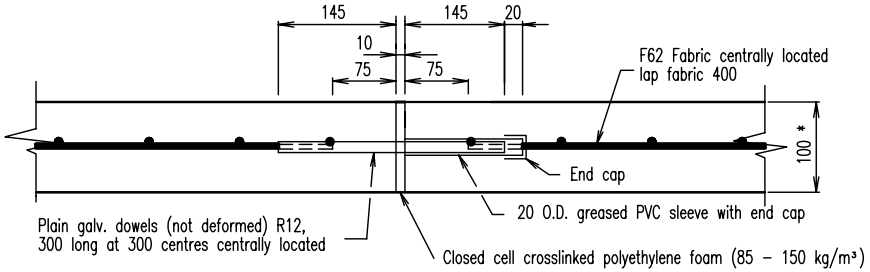

EXPANSION JOINT

Spacing 16m

* The thickness shall be 125 thick where there is likely vehicular traffic. (e.g. maintenance vehicles in parks etc.)

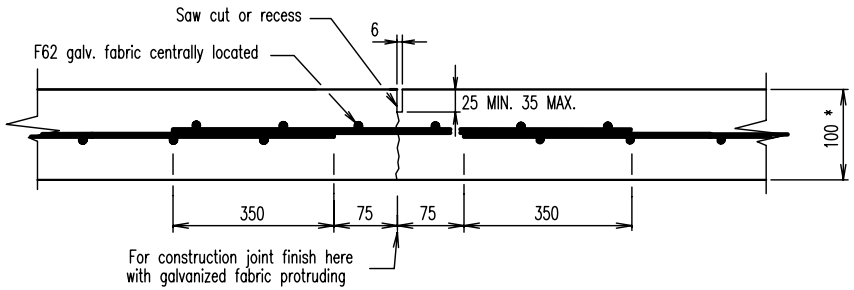

CONTRACTION JOINT

Spacing 4m

REINFORCED

NOTES:

1. Concrete N25 in accordance with AS 1379 and AS 3600.
2. Dowels Grade 250 steel to AS 1302. Fabric to AS 1304.
3. Galvanizing to AS 1650.
4. All dimensions in millimetres.

A	ORIGINAL ISSUE	1/98	
	REVISIONS	DATE	APPROVED

© REDLAND SHIRE COUNCIL

DISCLAIMER. The authors shall have no liability or responsibility to the user or any other person or entity with respect to any liability, loss or damage caused or alleged to be caused, directly or indirectly, by the adoption and use of these Standard Drawings including, but not limited to, any interruption of service, loss of business or anticipatory profits, or consequential damages resulting from the use of these Standard Drawings. Persons must not rely on these Standard Drawings as the equivalent of, or a substitute for, project-specific design and assessment by an appropriately qualified professional.

Redland SHIRE COUNCIL

BIKEPATH
PAVEMENT JOINTS

PARKS
Standard Drawing
P–RSC–2
A

NOTES

1. All Timber to be LOSP Treated Pine (Seasoned)
2. All Steelwork to be Hot Dip Galvanised
3. All Lettering to Sign Boards to be 100mm High Helvetica, Routed to max. depth 10mm and Painted in Yellow Gloss Acrylic.
4. All Timber to be Painted with Two Coats of Preservative Jarrah Stain or Intergrain Dark Cedar.
5. R.S.C. aluminium plaque (200x200) to be secured to rail using anti-theft screws and can only be removed using special tools.

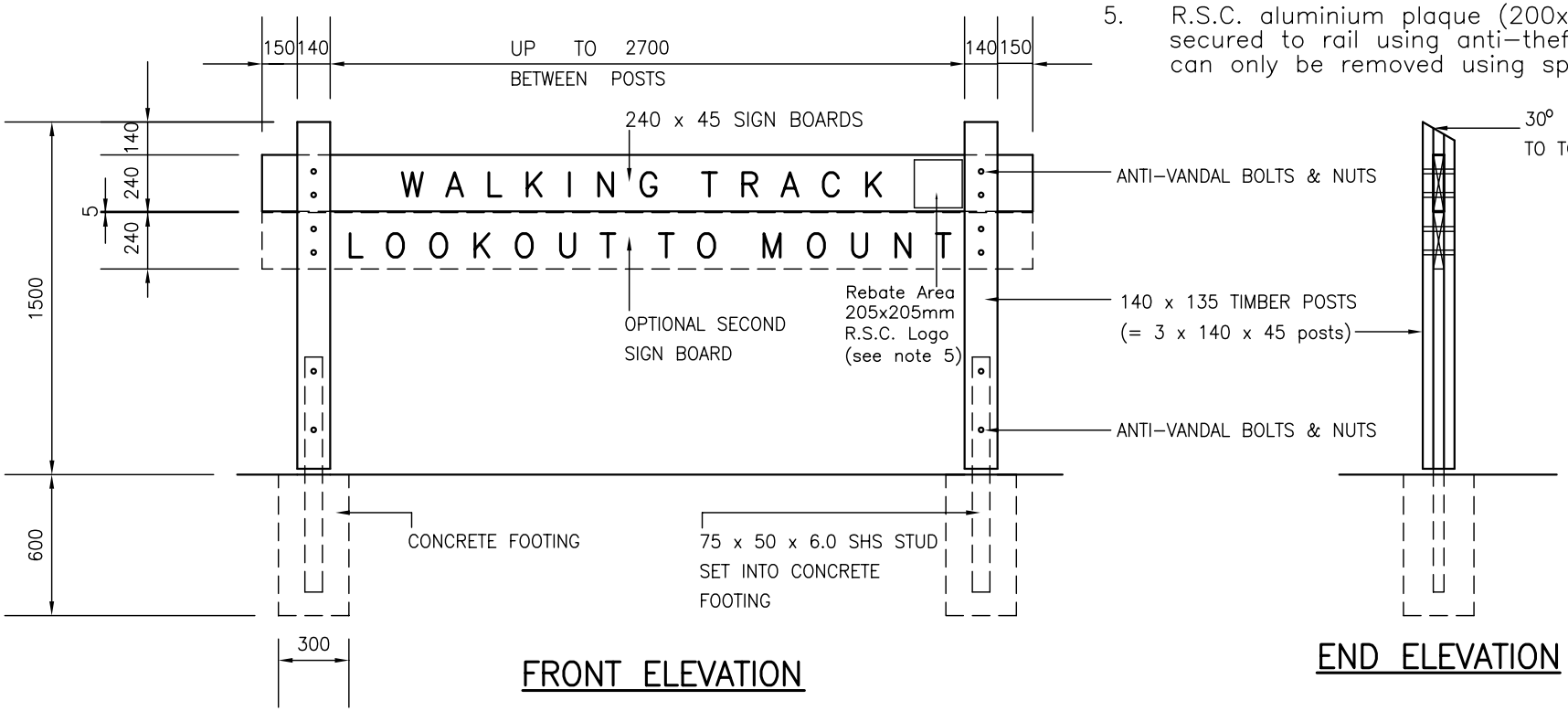

FRONT ELEVATION

END ELEVATION

A	ORIGINAL ISSUE	1/98	
	REVISIONS	DATE	APPROVED

© REDLAND SHIRE COUNCIL

DISCLAIMER. The authors shall have no liability or responsibility to the user or any other person or entity with respect to any liability, loss or damage caused or alleged to be caused, directly or indirectly, by the adoption and use of these Standard Drawings including, but not limited to, any interruption of service, loss of business or anticipatory profits, or consequential damages resulting from the use of these Standard Drawings. Persons must not rely on these Standard Drawings as the equivalent of, or a substitute for, project-specific design and assessment by an appropriately qualified professional.

Redland SHIRE COUNCIL

SIGNS
PARK NAME SIGN

PARKS
Standard Drawing
P-RSC-3
A

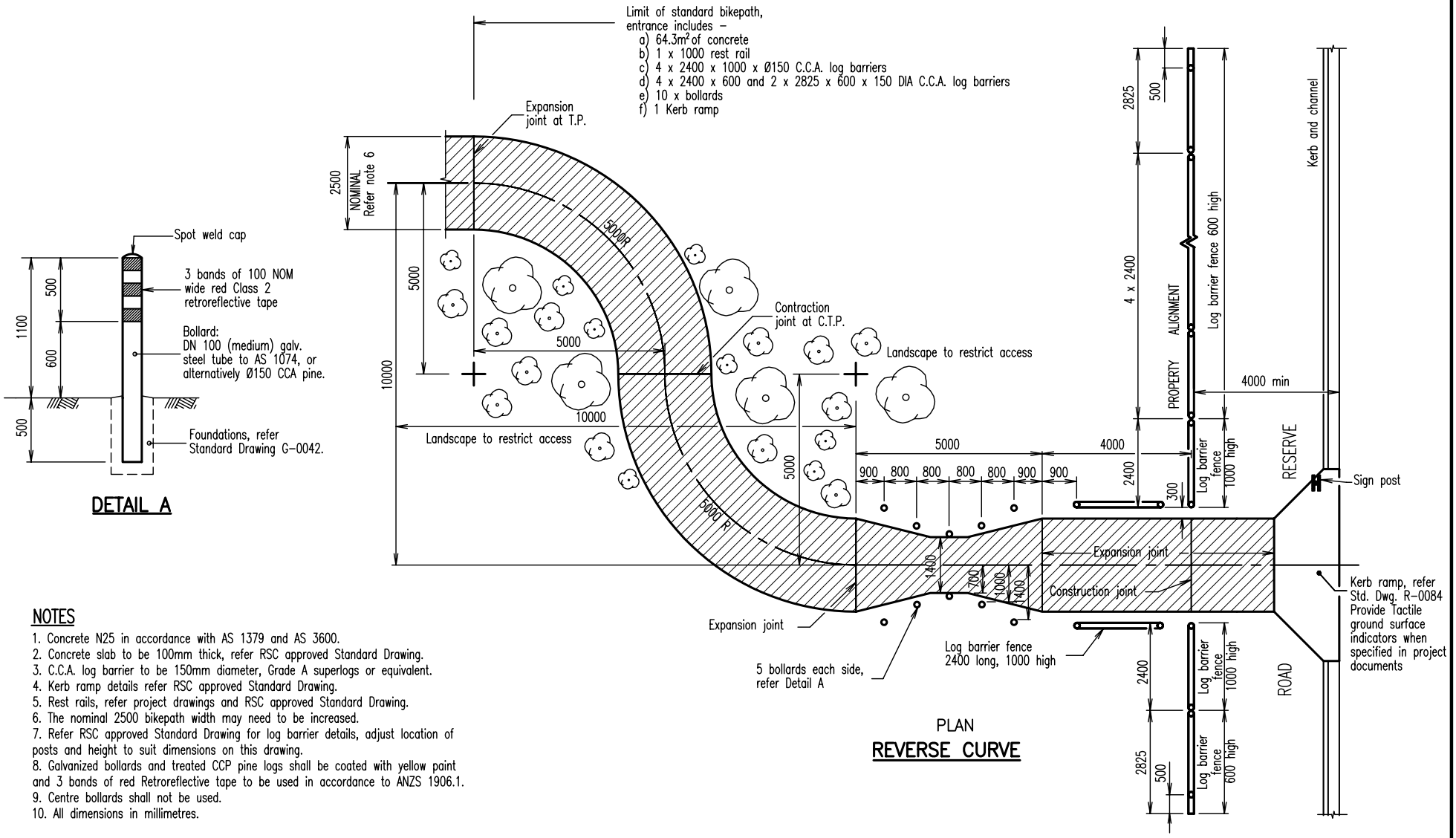

NOTES

1. Concrete N25 in accordance with AS 1379 and AS 3600.
2. Concrete slab to be 100mm thick, refer RSC approved Standard Drawing.
3. C.C.A. log barrier to be 150mm diameter, Grade A superlogs or equivalent.
4. Kerb ramp details refer RSC approved Standard Drawing.
5. Rest rails, refer project drawings and RSC approved Standard Drawing.
6. The nominal 2500 bikepath width may need to be increased.
7. Refer RSC approved Standard Drawing for log barrier details, adjust location of posts and height to suit dimensions on this drawing.
8. Galvanized bollards and treated CCP pine logs shall be coated with yellow paint and 3 bands of red Retroreflective tape to be used in accordance to ANZS 1906.1.
9. Centre bollards shall not be used.
10. All dimensions in millimetres.

A	ORIGINAL ISSUE	1/02	
REVISIONS		DATE	APPROVED

© REDLAND SHIRE COUNCIL

DISCLAIMER. The authors shall have no liability or responsibility to the user or any other person or entity with respect to any liability, loss or damage caused or alleged to be caused, directly or indirectly, by the adoption and use of these Standard Drawings including, but not limited to, any interruption of service, loss of business or anticipatory profits, or consequential damages resulting from the use of these Standard Drawings. Persons must not rely on these Standard Drawings as the equivalent of, or a substitute for, project-specific design and assessment by an appropriately qualified professional.

Redland SHIRE COUNCIL

BIKEPATH SLOWDOWN CONTROL REVERSE CURVE

PARKS
Standard Drawing
P-RSC-4
A

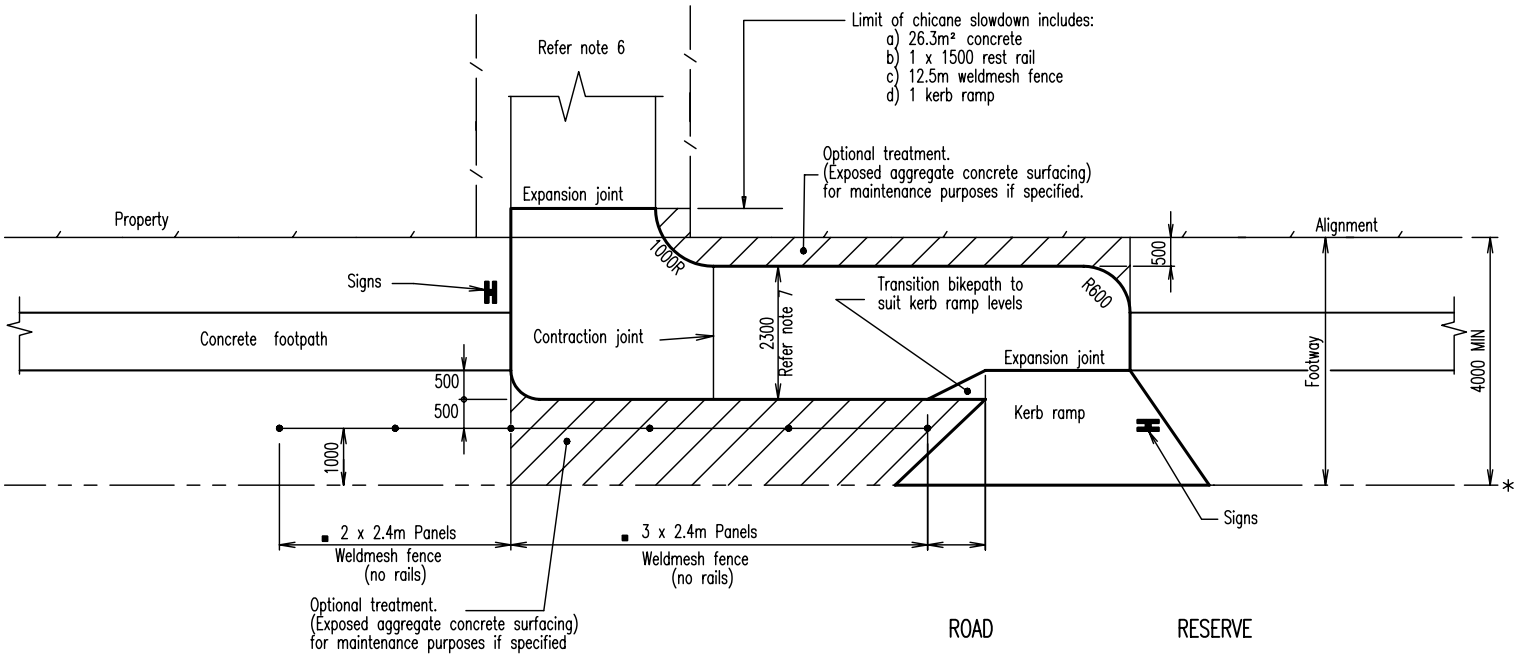

OFFSET CHICANE

- For use where reverse curve is not practical
- Recommended for areas with high primary school traffic

LEGEND

* Lip line

▪ Each section may be reduced by 1 panel, refer project drawings

● Unless otherwise specified

NOTES

1. Concrete N25 in accordance with AS 1379 and AS 3600.
2. Concrete slab to be 100mm thick, refer other RSC approved Standard Drawing.
3. Weldmesh fence details as per Standard Drawing G-0045.
4. Kerb ramp details as per RSC approved Standard Drawings. Provide Tactile ground surface indicators when specified in project documents.
5. The NOMINAL 2500 bikepath width may need to be increased for high use areas.
6. Bikepath width may need to be reduced to suit available footway. The preferred width is 2500; the absolute minimum width is 2000.
7. All dimensions in millimetres, unless shown otherwise.

A	ORIGINAL ISSUE	1/02	
REVISIONS		DATE	APPROVED

© REDLAND SHIRE COUNCIL

DISCLAIMER. The authors shall have no liability or responsibility to the user or any other person or entity with respect to any liability, loss or damage caused or alleged to be caused, directly or indirectly, by the adoption and use of these Standard Drawings including, but not limited to, any interruption of service, loss of business or anticipatory profits, or consequential damages resulting from the use of these Standard Drawings. Persons must not rely on these Standard Drawings as the equivalent of, or a substitute for, project-specific design and assessment by an appropriately qualified professional.

Redland SHIRE COUNCIL

BIKEPATH SLOWDOWN CONTROL OFFSET CHICANE

PARKS
Standard Drawing
P-RSC-5
A